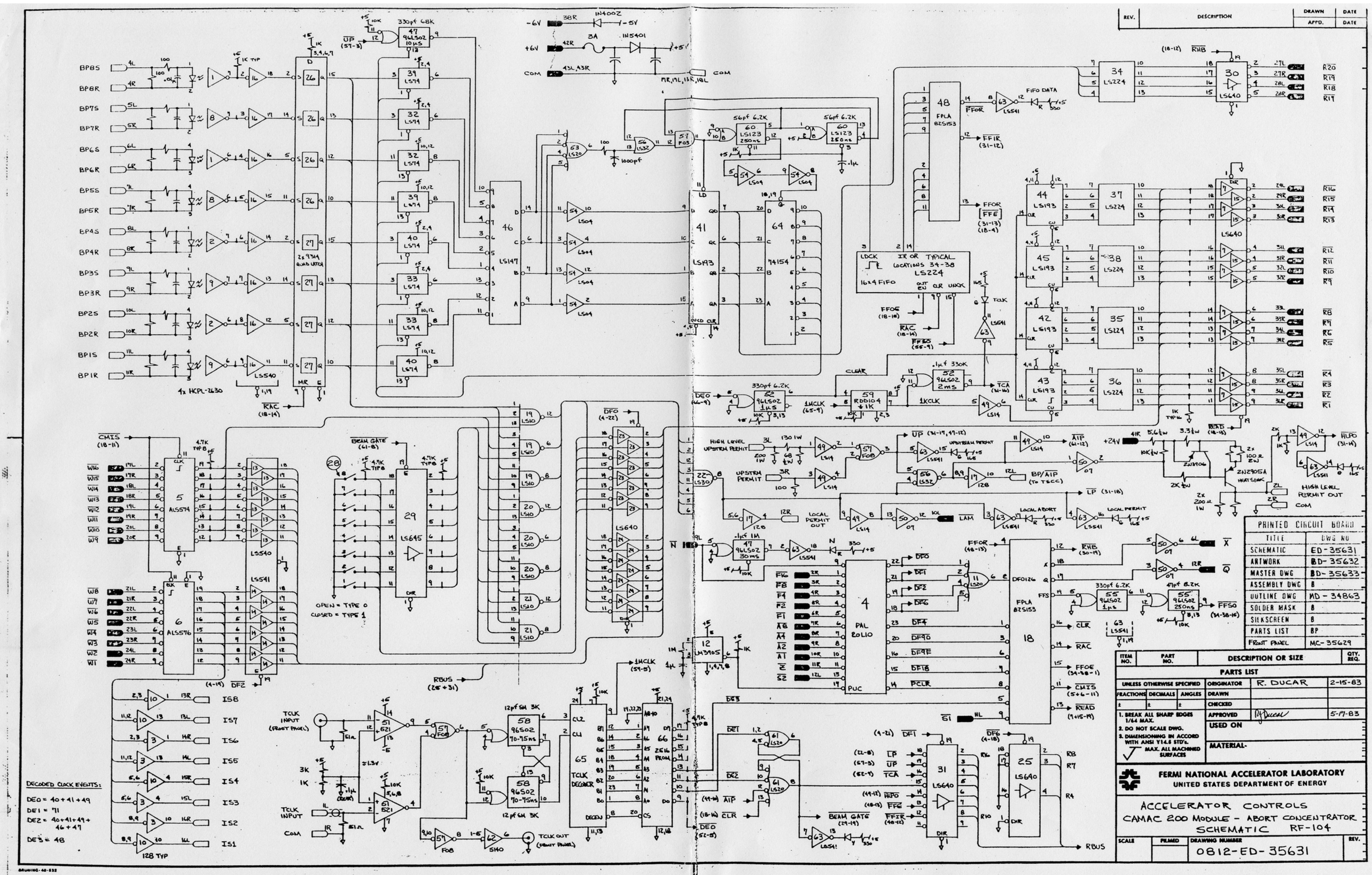

REV.
DESCRIPTION
DRAWN
APPD.
DATE
PRINTED CIRCUIT BOARD
TITLE
DWG NO
SCHEMATIC ED-35631
ARTWORK BD-35632
MASTER DWG BD-35633
ASSEMBLY DWG B
OUTLINE DWG MD-34863
SOLDER MASK B
SILKSCREEN B
PARTS LIST BP
FRONT PANEL MC-35629
ITEM NO.
PART NO.
DESCRIPTION OR SIZE
QTY. REQ.
PARTS LIST
UNLESS OTHERWISE SPECIFIED
FRACTIONS
DECIMALS
ANGLES
1. BREAK ALL SHARP EDGES 1/64 MAX.
2. DO NOT SCALE DWG.
3. DIMENSIONING IN ACCORD WITH ANSI Y14.5 STD'S.
MAX. ALL MACHINED SURFACES
ORIGINATOR R. DUCAR 2-15-83
DRAWN
CHECKED
APPROVED 5-17-83
USED ON
MATERIAL-
FERMI NATIONAL ACCELERATOR LABORATORY
UNITED STATES DEPARTMENT OF ENERGY
ACCELERATOR CONTROLS
CAMAC 200 MODULE - ABORT CONCENTRATOR
SCHEMATIC RF-104
SCALE
FILMED
DRAWING NUMBER
0812-ED-35631
REV.
DECODED CLOCK EVENTS:
DE0 = 40+41+49
DE1 = 71
DE2 = 40+41+49+46+47
DE3 = 48
4x HCPL-2630
128 TYP
IR OR TYPICAL LOCATIONS 34-38 LS224
16x4 FIFO
FPLA 82S153
PAL 20L10
FPLA 82S153
TCK DECODER
256 PROM
TCK INPUT (FRONT PANEL)
TCK OUT (FRONT PANEL)
OPEN = TYPE 0
CLOSED = TYPE 1
HIGH LEVEL UPSTRM PERMIT
UPSTRM PERMIT
LOCAL PERMIT OUT
LOCAL ABORT
LOCAL PERMIT
HIGH LEVEL PERMIT OUT
BEAM GATE
FIFO DATA