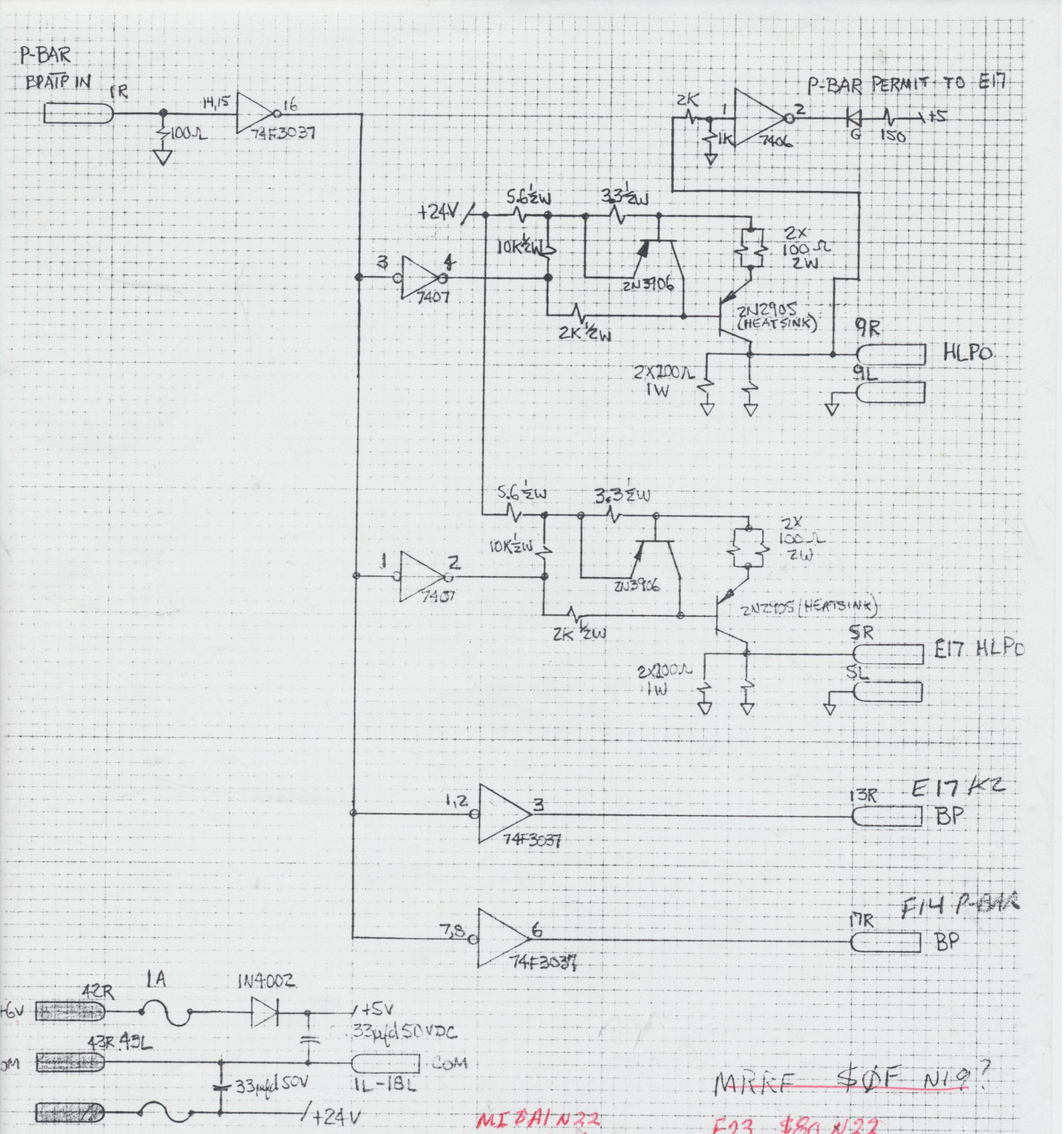

MIBA1 N22
FOR TEV ABORT
KICKERS

MRRF $ØF N19?

F23 $80 N22
1 - HLPO USED (TO F17?)
1 - BP USED (UNKNOWN)
1 - HLPO UNUSED ("N")
1 - BP UNUSED (K-LOOK)

HETZGEN 100% Rag Tracing Vellum