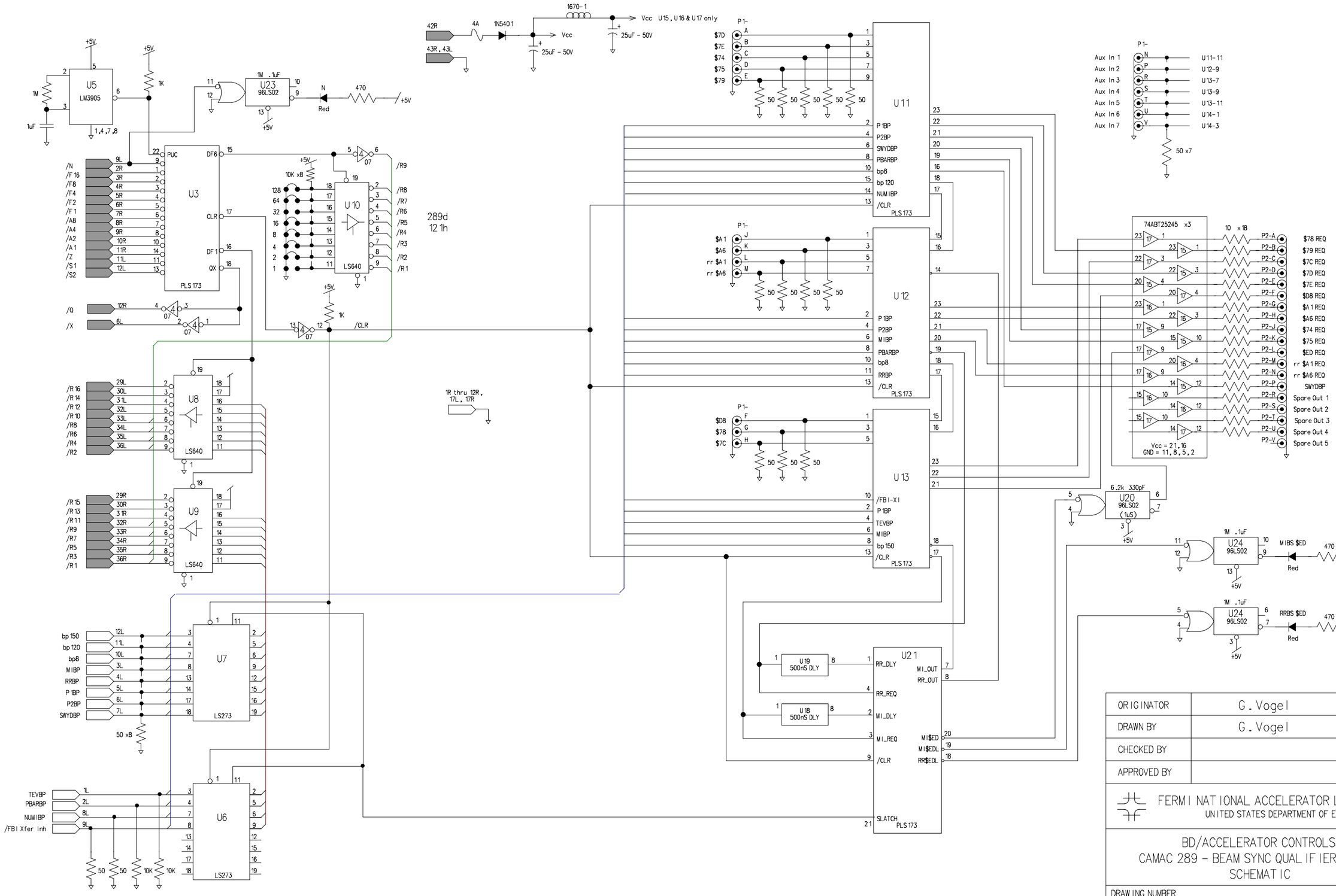

ORIGINATOR	G. Vogel	5/12/99
DRAWN BY	G. Vogel	2/9/00
CHECKED BY		
APPROVED BY		

FERMI NATIONAL ACCELERATOR LABORATORY
UNITED STATES DEPARTMENT OF ENERGY

BD/ACCELERATOR CONTROLS
CAMAC 289 - BEAM SYNC QUALIFIER MODULE
SCHEMATIC

DRAWING NUMBER

REV A