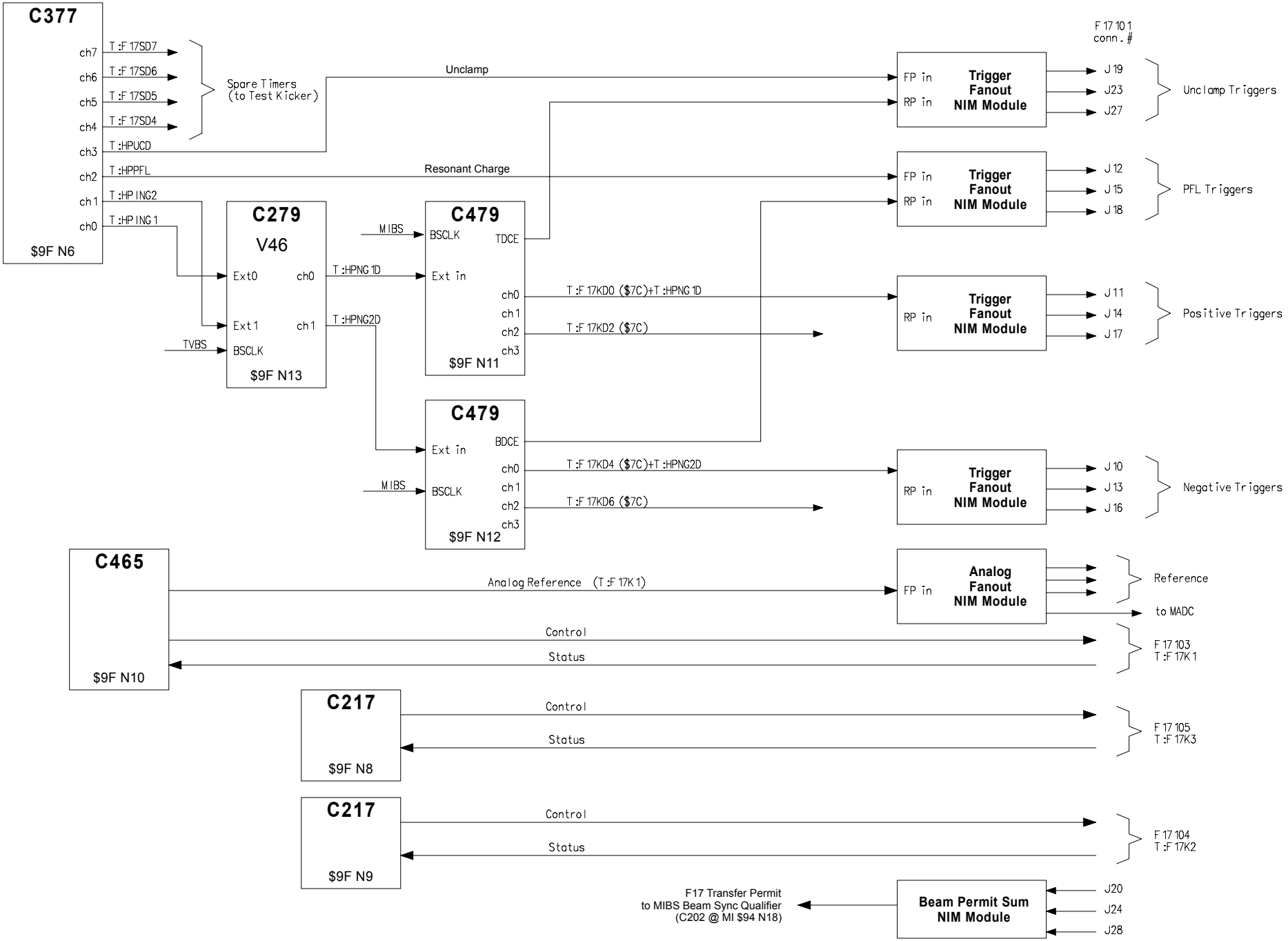

F17 Kicker Controls
2-10-05