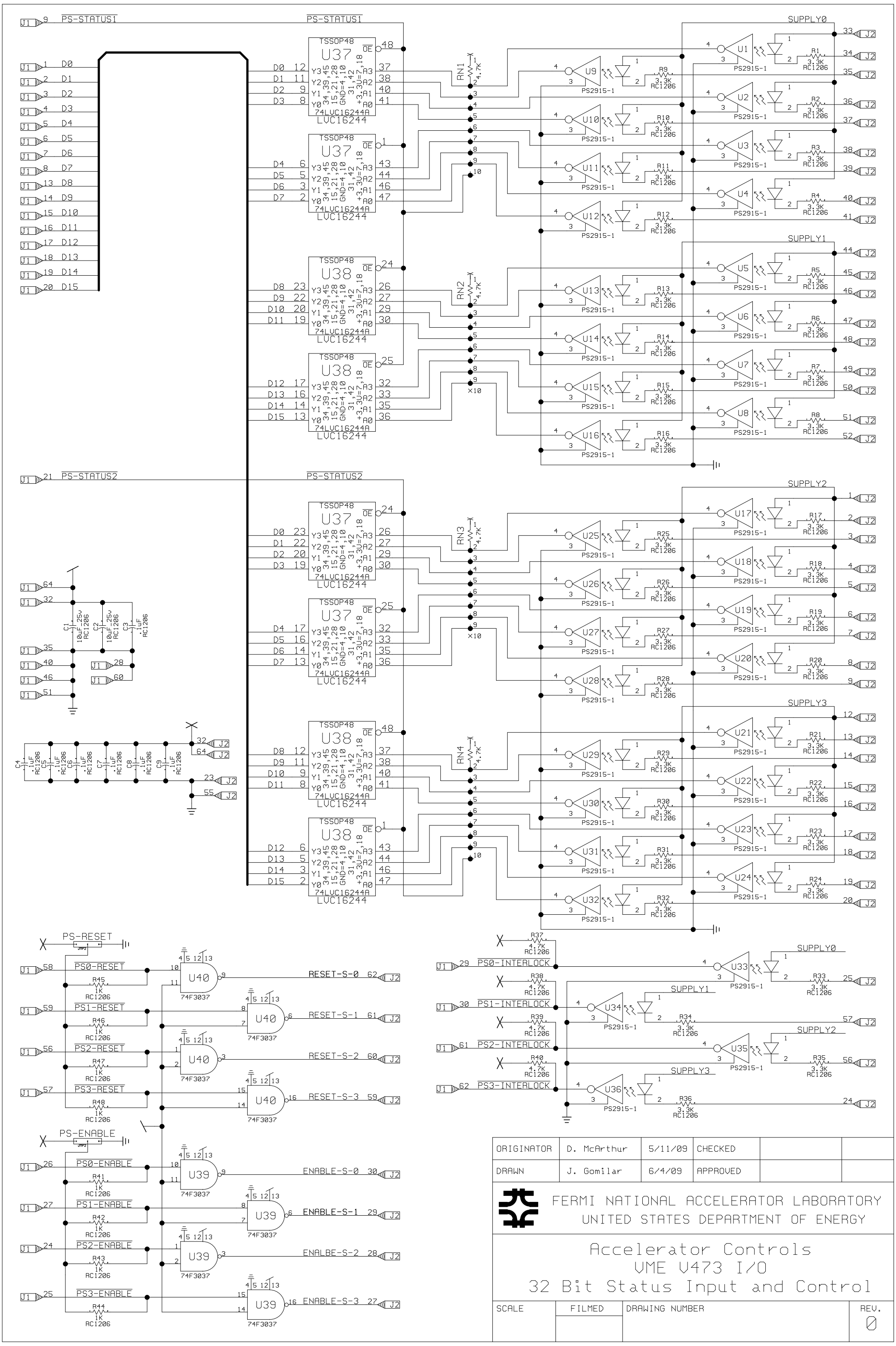

ORIGINATOR	D. McArthur	5/11/09	CHECKED		
DRAWN	J. Gomilar	6/4/09	APPROVED		

FERMI NATIONAL ACCELERATOR LABORATORY
UNITED STATES DEPARTMENT OF ENERGY

Accelerator Controls
VME V473 I/O
32 Bit Status Input and Control

SCALE	FILMED	DRAWING NUMBER	REV.
			0