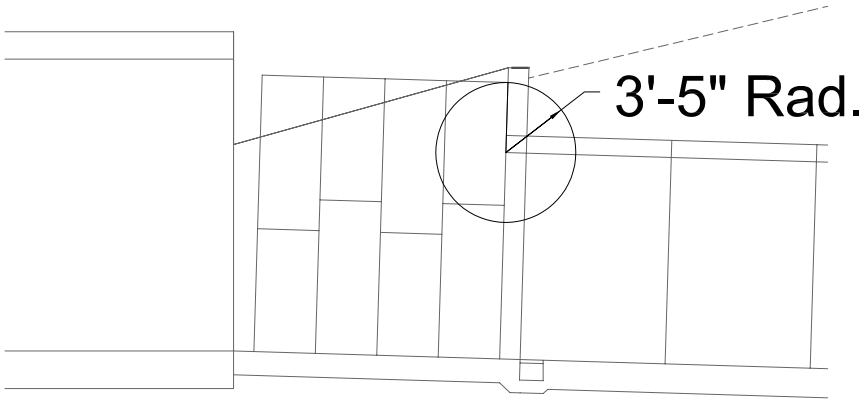

OLD CONFIGURATION

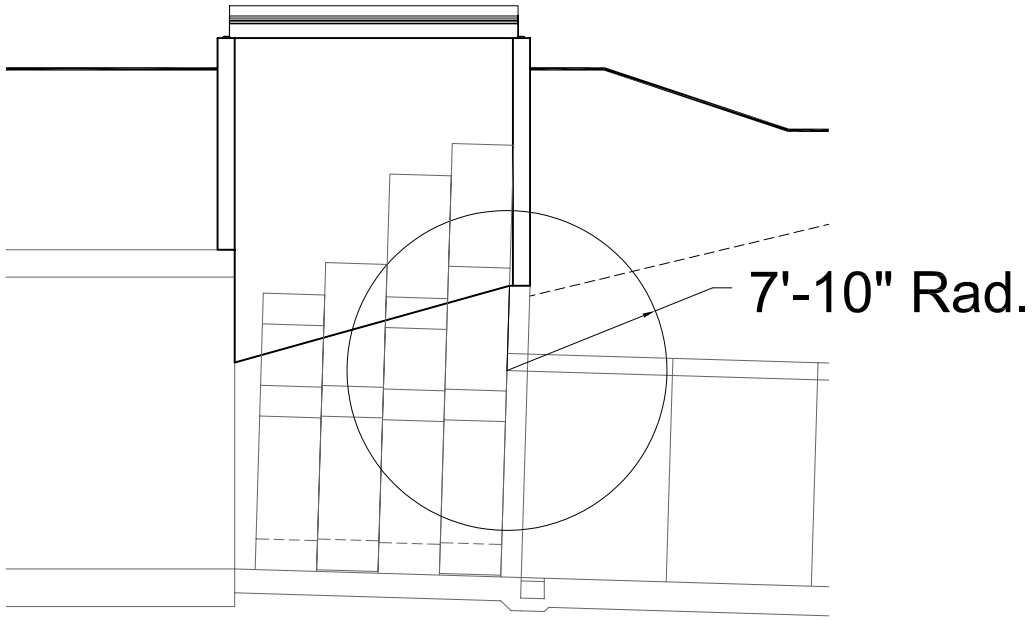

NEW CONFIGURATION