REV	DESCRIPTION	DRAWN	DATE
		APPROVED	DATE

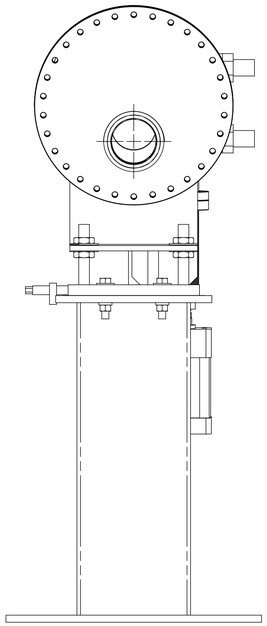

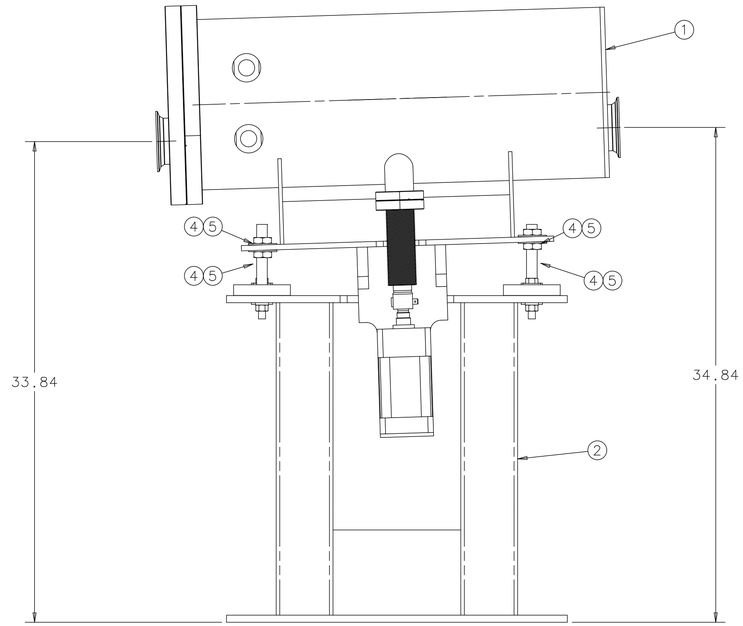

BEAMSTOP WITH STANDARD STAND

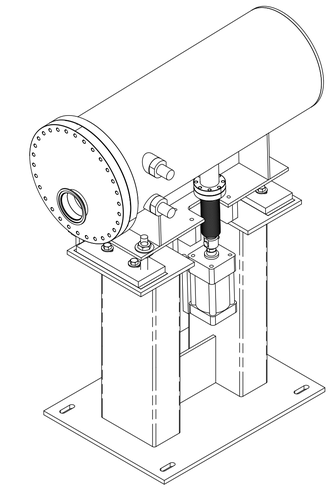

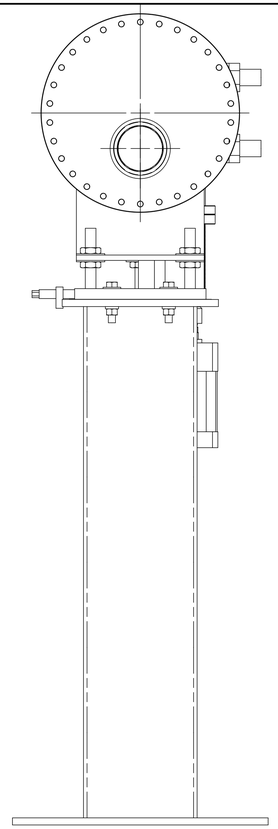

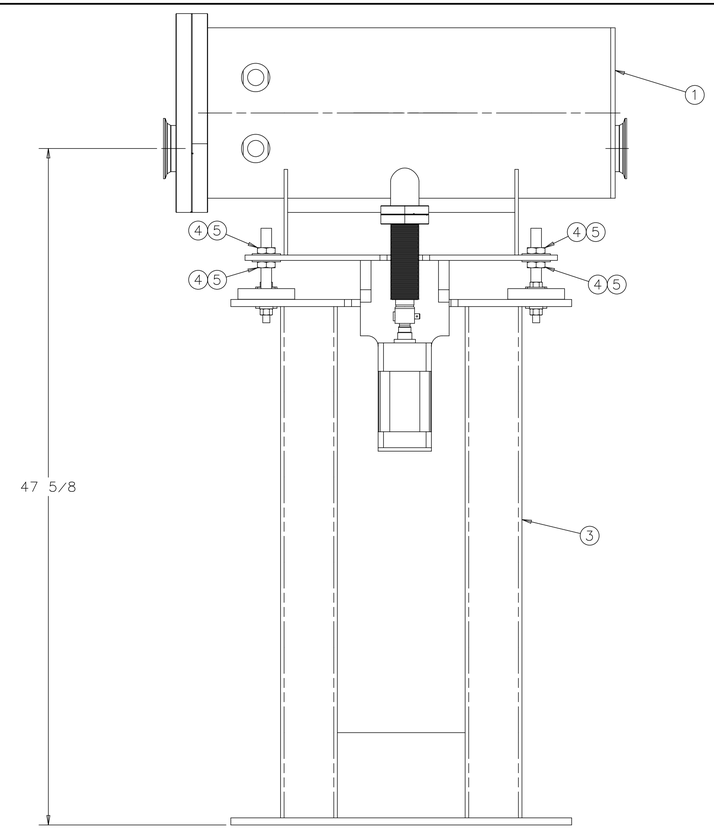

BEAMSTOP WITH TALL STAND

5		3/4 HEX JAM NUT (PER ASSY)	4
4		3/4 LOCK WASHER (PER ASSY)	4
3	MD-391305	BEAMSTOP STAND ASSEMBLY TALL	1
2	MD-391303	BEAMSTOP STAND ASSEMBLY SHORT	1
1	MD-391296	BEAMSTOP ASSEMBLY	1

UNLESS OTHERWISE SPECIFIED			ORIGINATOR	J.MISEK	12-SEP-2007
FRACTIONS	XX	ANGLES	DRAWN	S.OPLT	12-SEP-2007
± 1/64	± .01	±0.5°	CHECKED		
			APPROVED		
			USED ON		
			MATERIAL	SEE PARTS LIST	

1. BREAK ALL SHARP EDGES .015 MAX.
2. DO NOT SCALE DRAWING.
3. DIMENSIONS BASED UPON ASME Y14.5M-1994
4. MAX. ALL MACH. SURFACES 63
5. DRAWING UNITS: U.S. INCH

FERMI NATIONAL ACCELERATOR LABORATORY
UNITED STATES DEPARTMENT OF ENERGY

MUCOOL
BEAMSTOP
BEAMSTOP WITH STAND ASSEMBLY

SCALE	DRAWING NUMBER	SHEET	REV
3/16	2130.000-MD-391316	1 OF 1	

CREATED WITH : Ideas12NXSeries | GROUP: ACCELERATOR MECH. SUPPT.

Created: 14:46:14 on 07-11-07 (D-M-Y) By: scotto State: 1-INITIAL