ESS and RAL Proton Driver

Christopher R. Prior

Rutherford Appleton Laboratory and
Trinity College, University of Oxford

Contents

- ESS
  - overview
  - recent developments
  - R&D programme
  - status of project
- UK Neutrino Factory studies
  - RAL synchrotron-based designs
  - CERN study
  - R&D
  - status

European Spallation Source

- EU collaboration
  - Germany (Jülich, Frankfurt)
  - Sweden (Uppsala)
  - Italy (INFN)
  - Spain
  - U.K. (RAL)
  - France (CEA-Saclay)

- 5 MW proton source
- 1.334 GeV energy, 50 Hz
- Funnelled linac (2 x 57 mA), nc and sc options
- Two accumulator rings
- Liquid mercury target
- Reference design I (1996)
- Reference design II (~2000)

Long pulse target planned

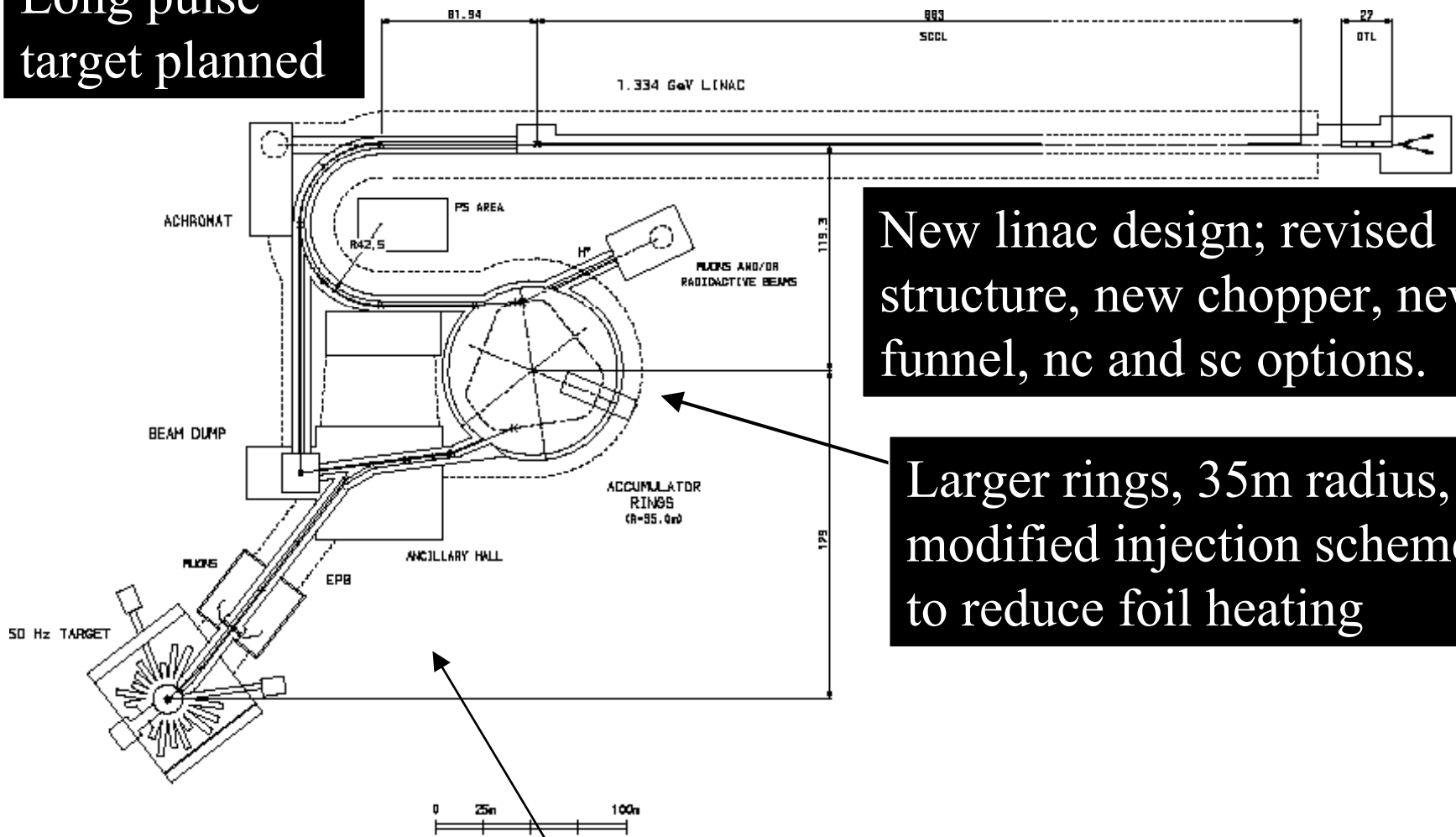

New linac design; revised structure, new chopper, new funnel, nc and sc options.

Larger rings, 35m radius, modified injection scheme to reduce foil heating

10 Hz target abandoned

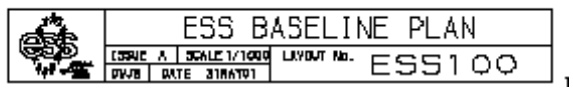

ESS Linac 5 MW Reference Design (2001)

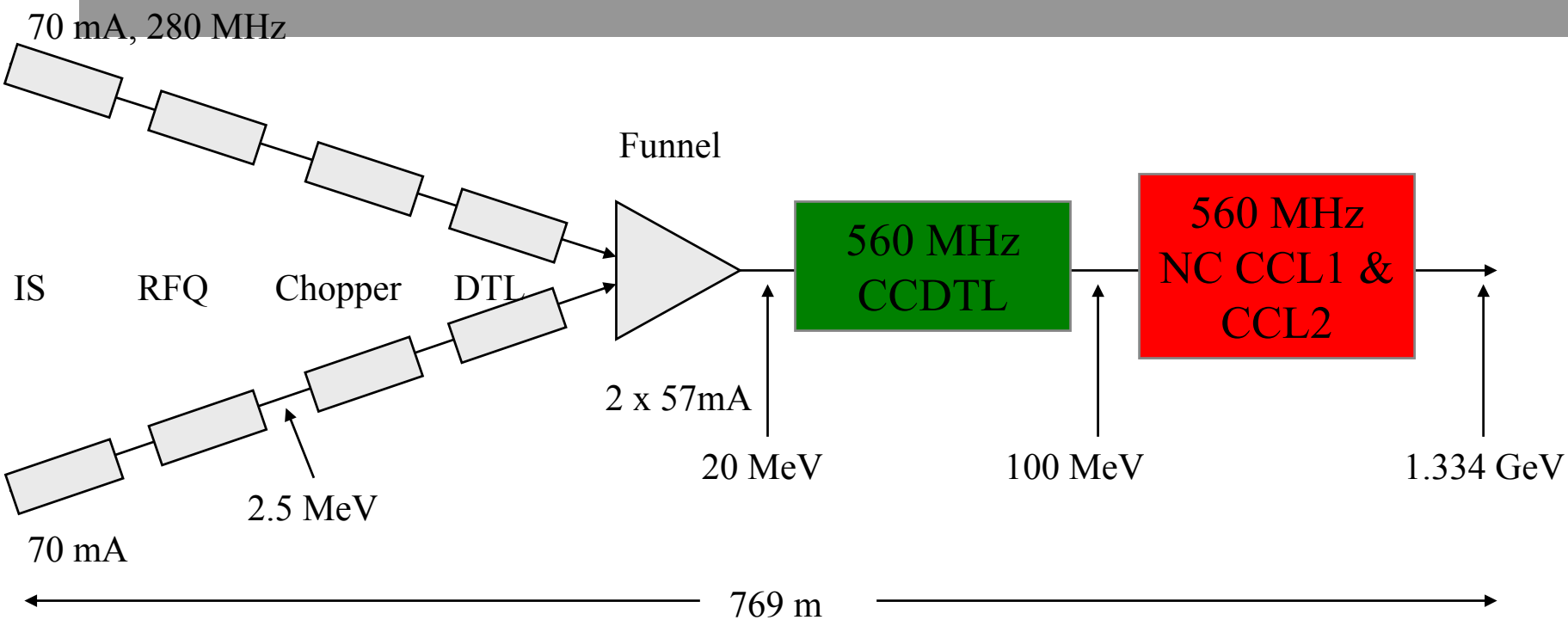

RFQ	FODO	2βλ
DTL	FODO	4βλ
Funnel	FODO	9βλ
CCDTL	FODO	10βλ
CCL	FODO	11βλ or 12βλ

Chopping factor	70%
Chopping frequency	1.242 MHz
Duty Factor	5%
Beam pulse length	2 x 500 μs

High efficiency RF power sources being considered (IOT)

ESS Linac 5 MW Superconducting Design

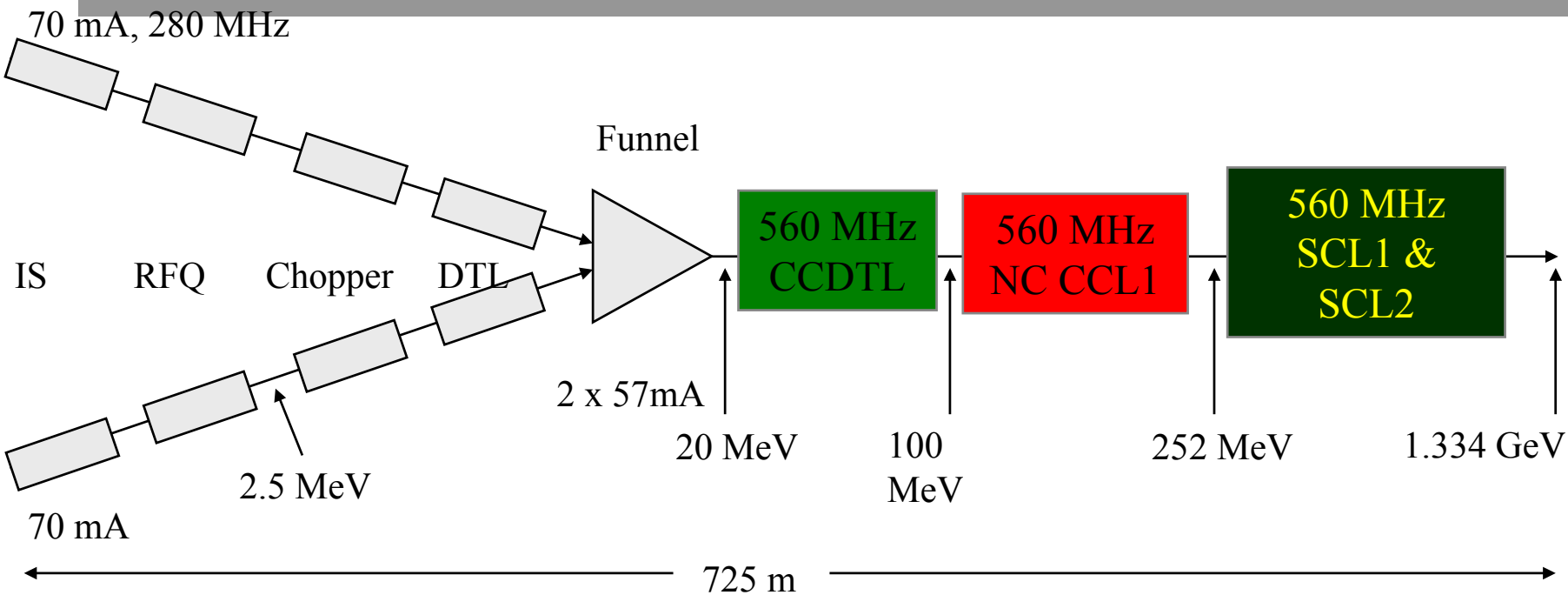

RFQ	FODO	2βλ
DTL	FODO	4βλ
Funnel	FODO	9βλ
CCDTL	FODO	10βλ
CCL1	FODO	11βλ
SCL1	FODO	15βλ
SCL2	FODO	14βλ

Chopping factor	70%
Chopping frequency	1.242 MHz
Duty Factor	5%
Beam pulse length	2 x 500 μs

High efficiency RF power sources being considered (IOT)

ESS Achromat

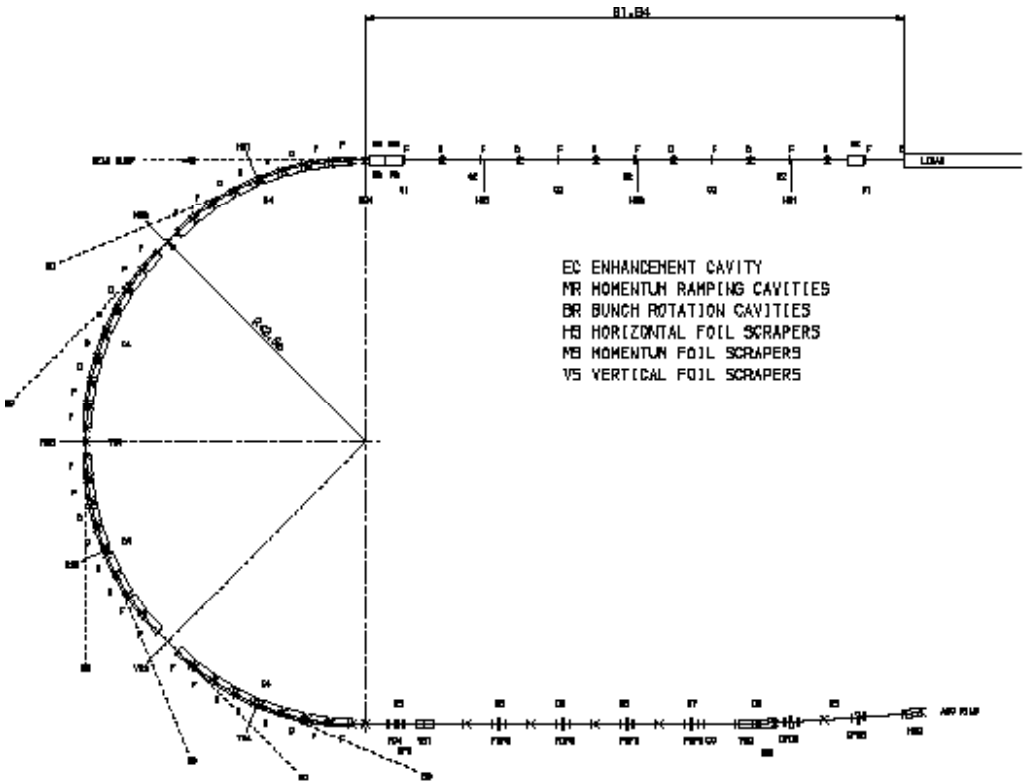

Figure 3.3 Schematic Layout of 1.334 GeV Injection Beam Line

ESS Rings

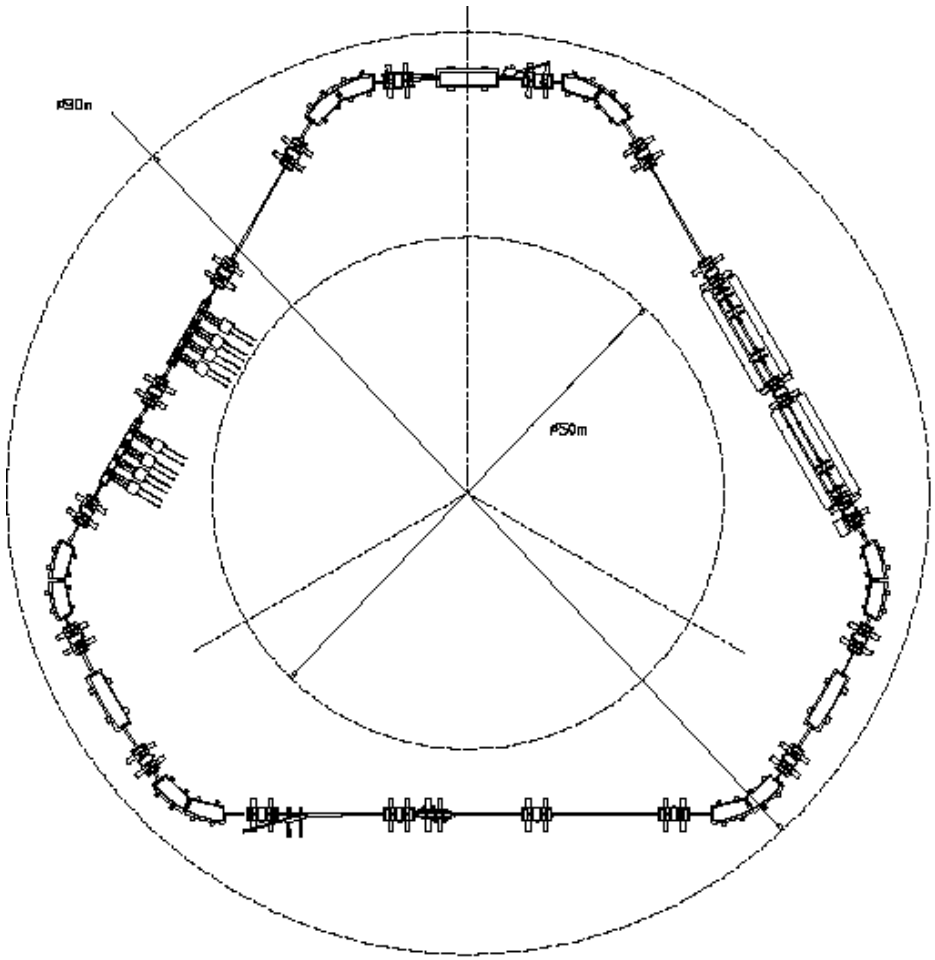

Ring radius	**35 m**
Injection dipole field	**0.177 T**
Ring tunes Q_h:Q_v	**4.31:4.19**
Tune depression $\Delta Q_h \sim \Delta Q_v$	**-0.07**
Number of injection turns	**637**
Injection period	**500 μs**

Two rings, filled one after the other, each to generate a 400 ns bunch. Two bunches combined on extraction to give a ~1μs pulse at target.

ESS Front End Development:

Work for ISIS to be extended to ESS

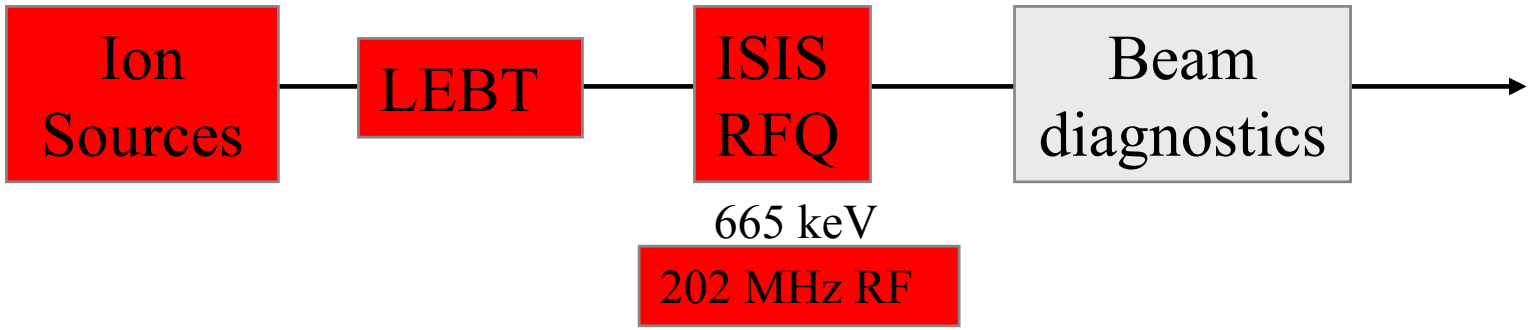

Stage 1 30 mA, 2.5% DC 60 mA, 10% DC

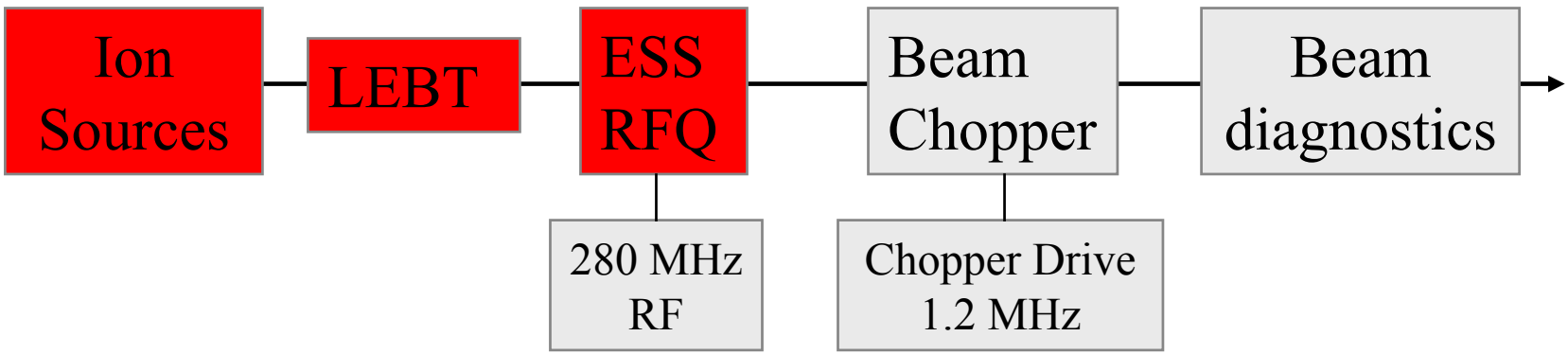

Stage 2 2.5 MeV, 60mA, 6% DC

Ion Source Development

View of Ion Source Development Rig. Left hand rack: includes temperature controller for ion source anode, cathode, caesium injection, etc., and gas controller for hydrogen injection. Right hand rack: includes specialised IGBT-based driver for ion source arc (at bottom of rack). To right of right hand rack: voltage stabilised 17 kV pulser for extracting H- ions from the plasma. Bottom right corner of picture: refrigerator for caesium condensation and water cooler for magnet providing both Penning field for source and field for separating electrons from H- ions..

RFQ Development

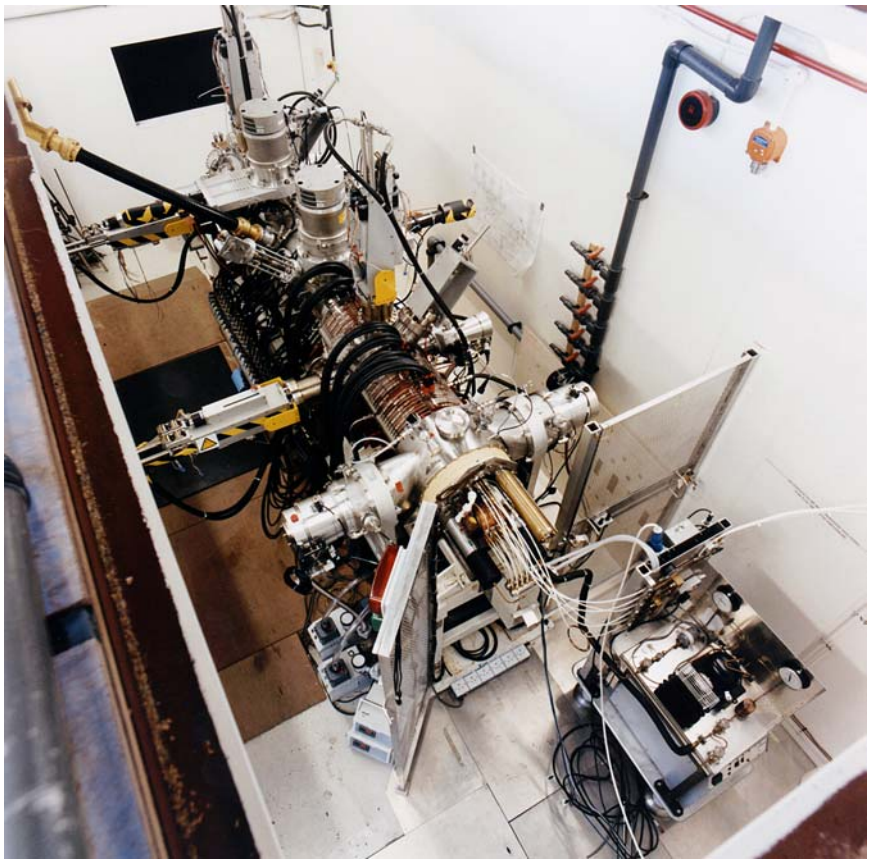

View from upstream end of test stand, showing, in order from the bottom to the top of the picture: high voltage (-35 kV) platform with water cooler and refrigerator for the ion source; part of the HV protection fence; ion source, pumped from each side by two 1000 litres/second turbomolecular pumps each with its own gate valve; two solenoids of the three-solenoid LEBT for matching the beam from the ion source to the RFQ; low energy end beam diagnostics box which includes a pair of emittance scanners; the third solenoid of the LEBT; the RFQ accelerator itself with its 3-inch ~200 kW RF feed line coming down from above-left.

ESS Chopper (2.5 MeV)

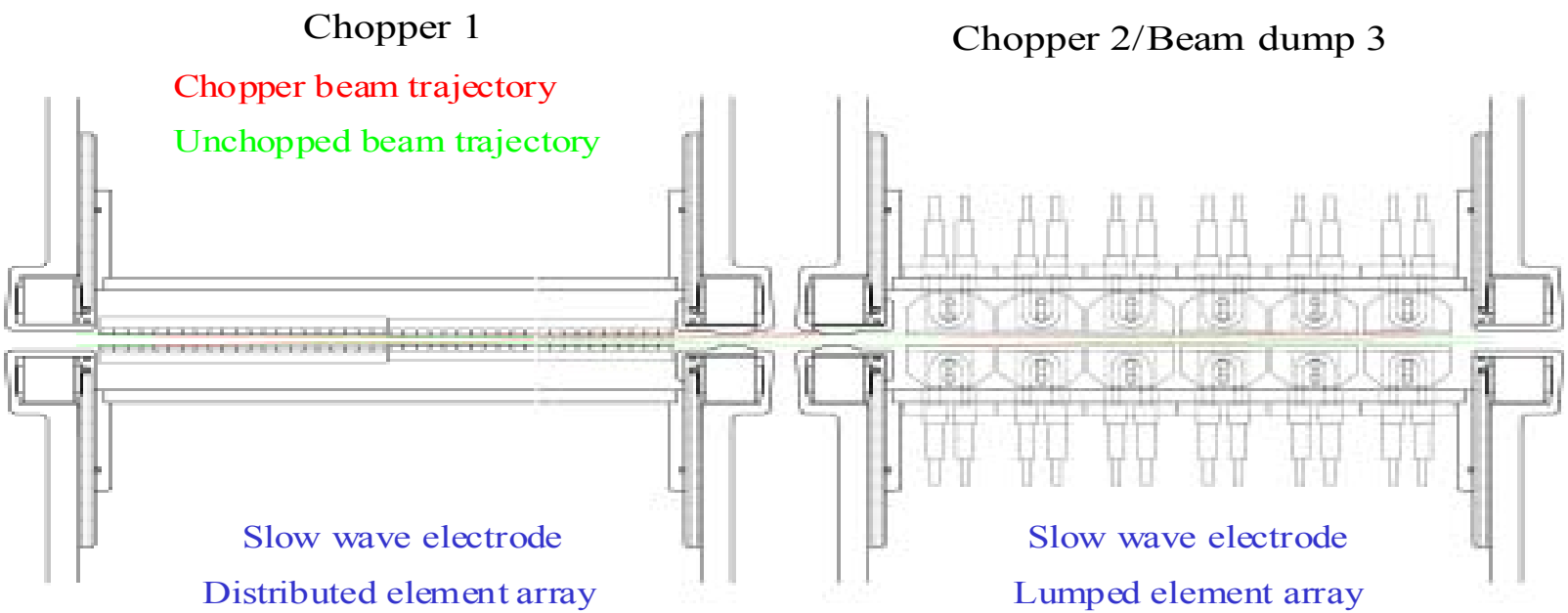

Beam deflected by first plates, collected by second plate, parallel to direction of travel in order to dissipate heat load. Chopping at 65-70% of ring revolution frequency.

ESS 20 MeV Funnel

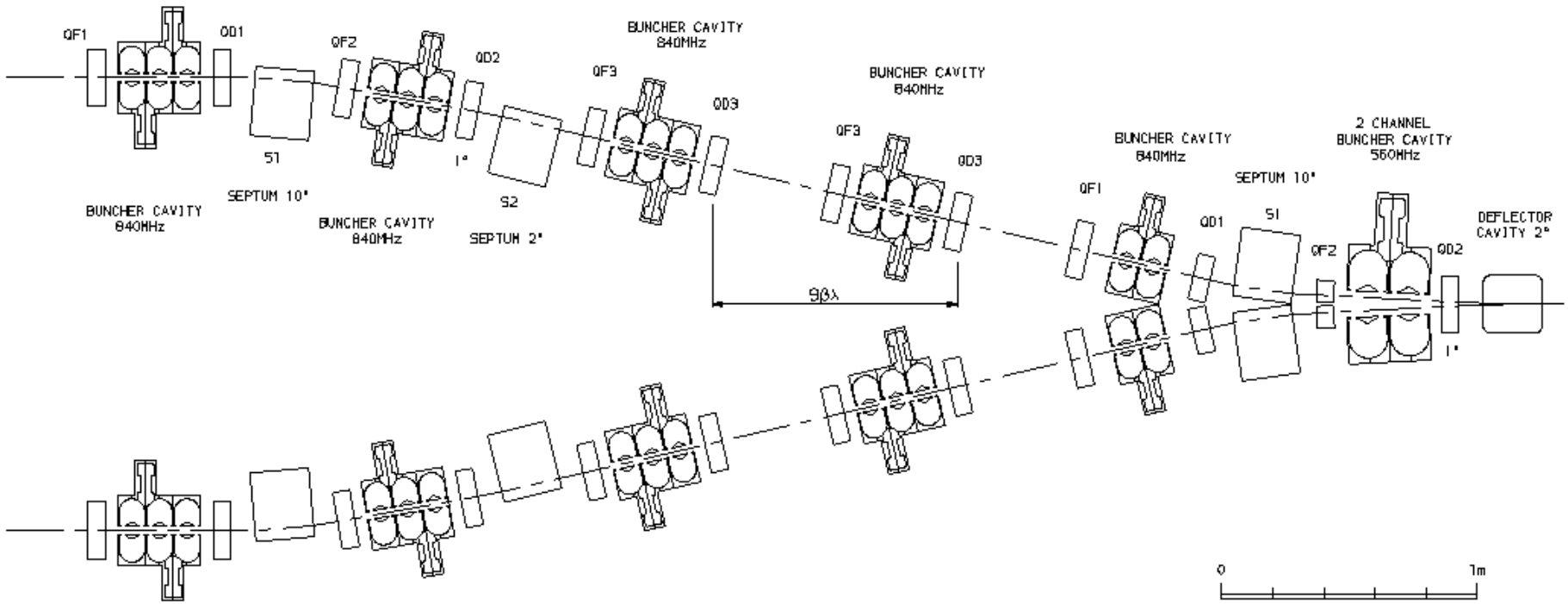

6 cells, 45° phase advance per cell under space charge.

Designed for <1% emittance growth

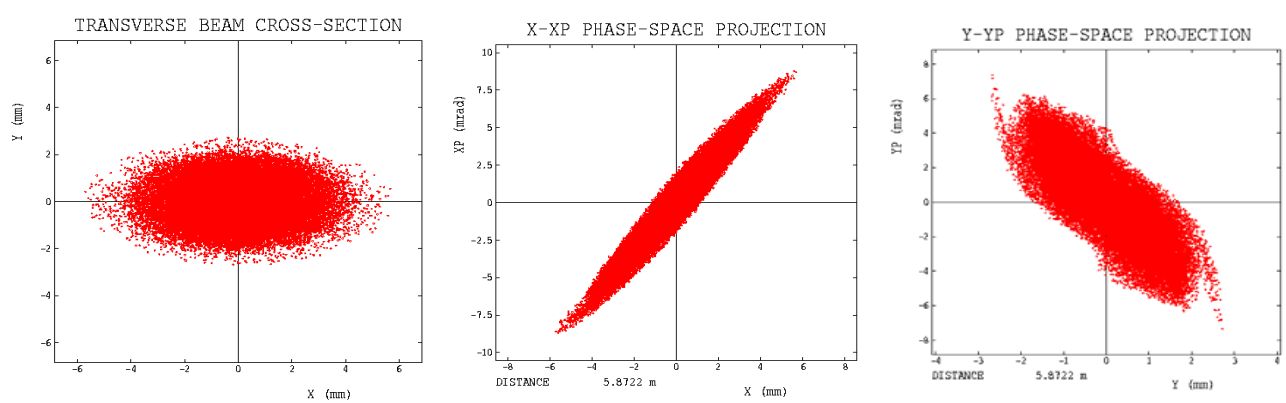

ESS Participant Status

- RAL (UK)
  - Providing RFQ and Chopper test stand
  - Linac and Ring beam dynamics and design in collaboration with Frankfurt, Jülich and SNS
  - Laser stripping studies (with LANL, JAERI)
  - Beam loss collectors
- Uppsala (Sweden)
  - Designing deflector and beam collector system
  - Considering chopper electronics
- Frankfurt University (Germany)
  - Providing ISIS RFQ + technical expertise
  - Providing advice on ESS RFQ design
  - Providing chopper buncher cavities
- RISØ (Denmark)
  - Negotiations for provision of chopper quadrupoles and power supplies by Danfysic
- JÜLICH (Germany), CEA-SACLAY (France)
  - superconducting linac studies (ESS-CONCERT)

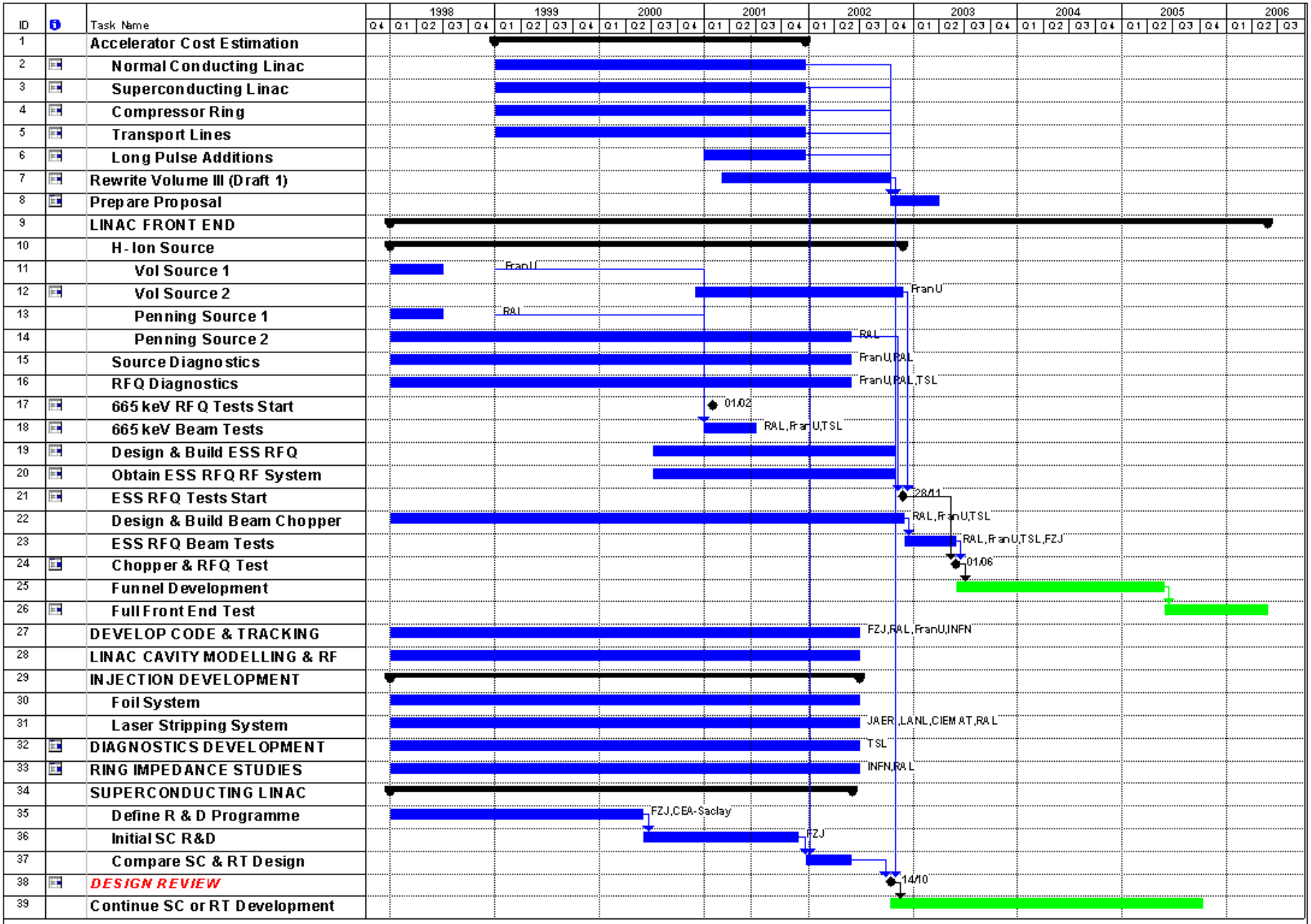
ID
Task Name
1998
1999
2000
2001
2002
2003
2004
2005
2006
1 Accelerator Cost Estimation
2 Normal Conducting Linac
3 Superconducting Linac
4 Compressor Ring
5 Transport Lines
6 Long Pulse Additions
7 Rewrite Volume III (Draft 1)
8 Prepare Proposal
9 LINAC FRONT END
10 H- Ion Source
11 Vol Source 1
FranU
12 Vol Source 2
FranU
13 Penning Source 1
RAL
14 Penning Source 2
RAL
15 Source Diagnostics
FranU,RAL
16 RFQ Diagnostics
FranU,RAL,TSL
17 665 keV RFQ Tests Start
01/02
18 665 keV Beam Tests
RAL,FranU,TSL
19 Design & Build ESS RFQ
20 Obtain ESS RFQ RF System
21 ESS RFQ Tests Start
28/11
22 Design & Build Beam Chopper
RAL,FranU,TSL
23 ESS RFQ Beam Tests
RAL,FranU,TSL,FZJ
24 Chopper & RFQ Test
01/06
25 Funnel Development
26 Full Front End Test
27 DEVELOP CODE & TRACKING
FZJ,RAL,FranU,INFN
28 LINAC CAVITY MODELLING & RF
29 INJECTION DEVELOPMENT
30 Foil System
31 Laser Stripping System
JAERI,LANL,CIEMAT,RAL
32 DIAGNOSTICS DEVELOPMENT
TSL
33 RING IMPEDANCE STUDIES
INFN,RAL
34 SUPERCONDUCTING LINAC
35 Define R & D Programme
FZJ,CEA-Saclay
36 Initial SC R&D
FZJ
37 Compare SC & RT Design
38 DESIGN REVIEW
14/10
39 Continue SC or RT Development
Project: ESS Acc Dev Programme
Date: Wed 13/06/01
Task
Progress
Milestone
Summary
Phase 2
External Milestone
Deadline

ESS Work Programme

- Complete Phase I of front end development (cf SNS $30M)
- Start RF source development in industry: IOTs (inductive output tubes) and Diacrodes
- Produce new version of ESS Technical Report (Summer 2002)
- Compare NC and SC linac options: cost (capital and operating) and technical benefits and risks
- Update cost estimate for ESS accelerator (presented at Uppsala, June 2001)
- Prepare bids to Brussels for October 2003 - final site decision