Long 13 Extraction Layout

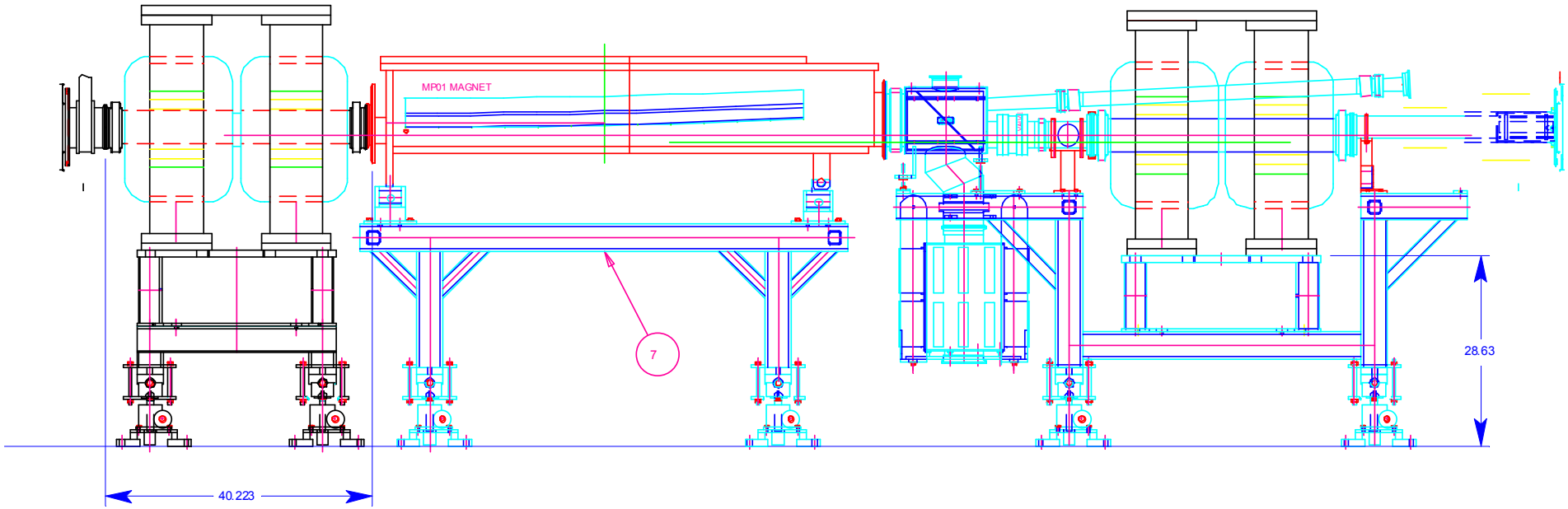

Existing PS Circuit

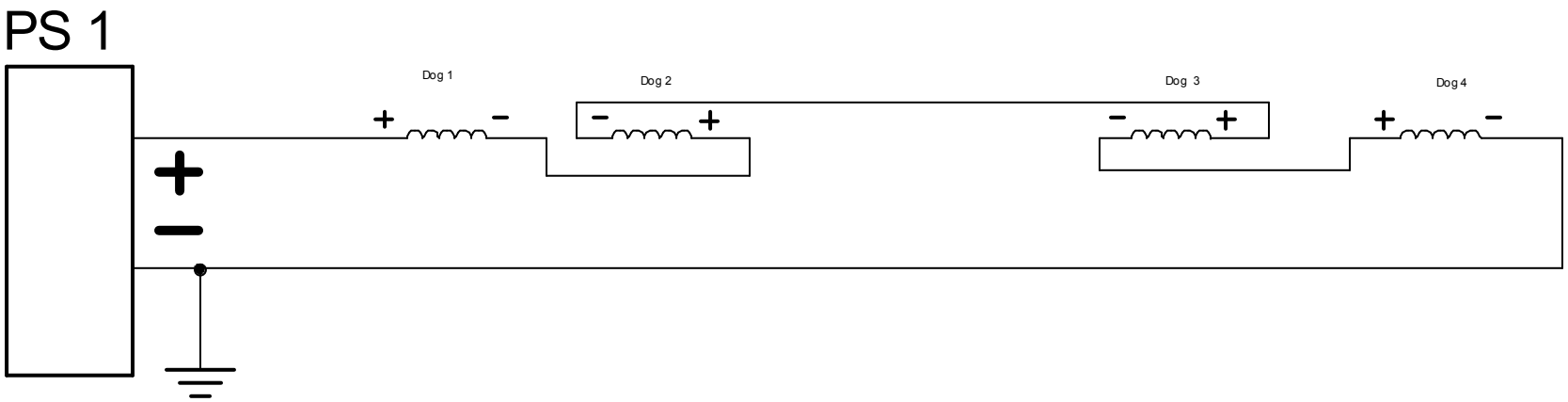
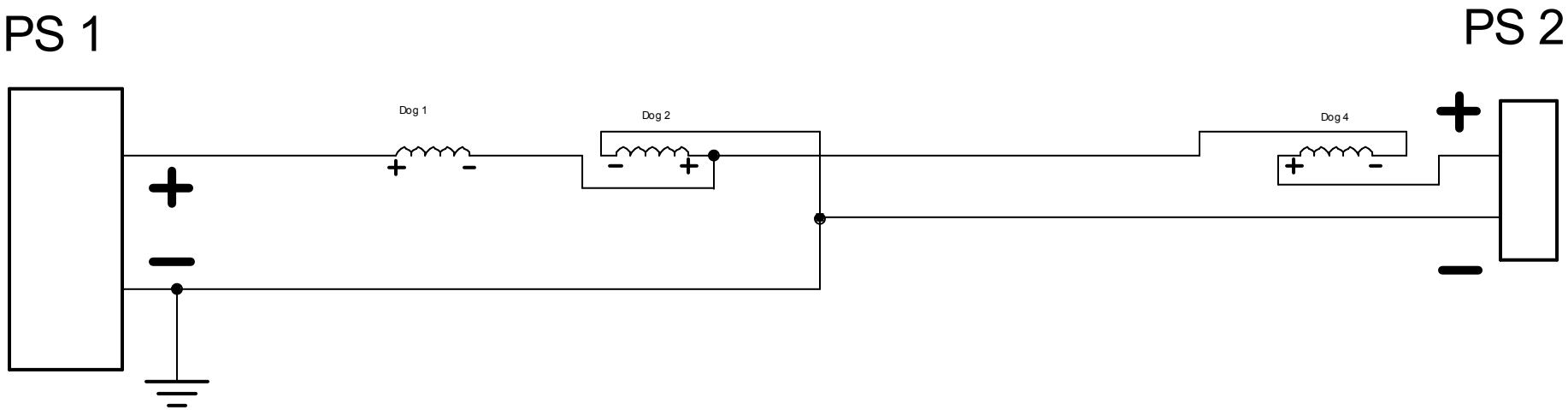
Modified PS Circuit