Some things affected by change to 12Hz operation of Booster

Timeline Generator (TLG)

- 15Hz Hardware Interrupt Driven
  All events are
  played on 15Hz/15Hz+DLY
- 15Hz used in all calculations
  - Timeline Modules
  - Saved Timelines
  - MiniBooNe Event Placement

IRM's

- Alarm on loss of 15Hz interrupt
  ($0C sourced by TLG along with
  Booster reset)

UCDA, UCDB & UCDT

- Provide clock event info for
  TCLK Multicast and D33 Application
- Data return & Error checking based
  on 15Hz events

Front Ends

- Many have 15Hz data acquisition
  tasks based on booster beam cycle

Beam Budget Monitor

- Calculations based on 15Hz DAQ

MI Ramps

- 8 GeV front porch length changes
- Cycle length & internal timing
    - Start of Ramp
    - Start of Flattop
    - Abort Cleanup time
    - End of Beam Operations

MI LLRF

- Internal timing changes
    - Beam feedback timing, etc.
    - Many/all I6 tables

TCLK Timers

- Instrumentation, etc.
- MiniBooNe Beam Permit C204 tables
- Booster timers
- MI Injection related timers
- Beam Sync transfer event timers

Linac Systems

- Lots of old hardware with 15Hz hardwired timing (1 shots, etc.)

NTF

- Lots of old hardware with 15Hz hardwired timing (1 shots, etc.)
    - NTF Interlock Box
- Dose Rate Calculations/readbacks

Any automated DAQ tasks that assume 15Hz data return/operation.

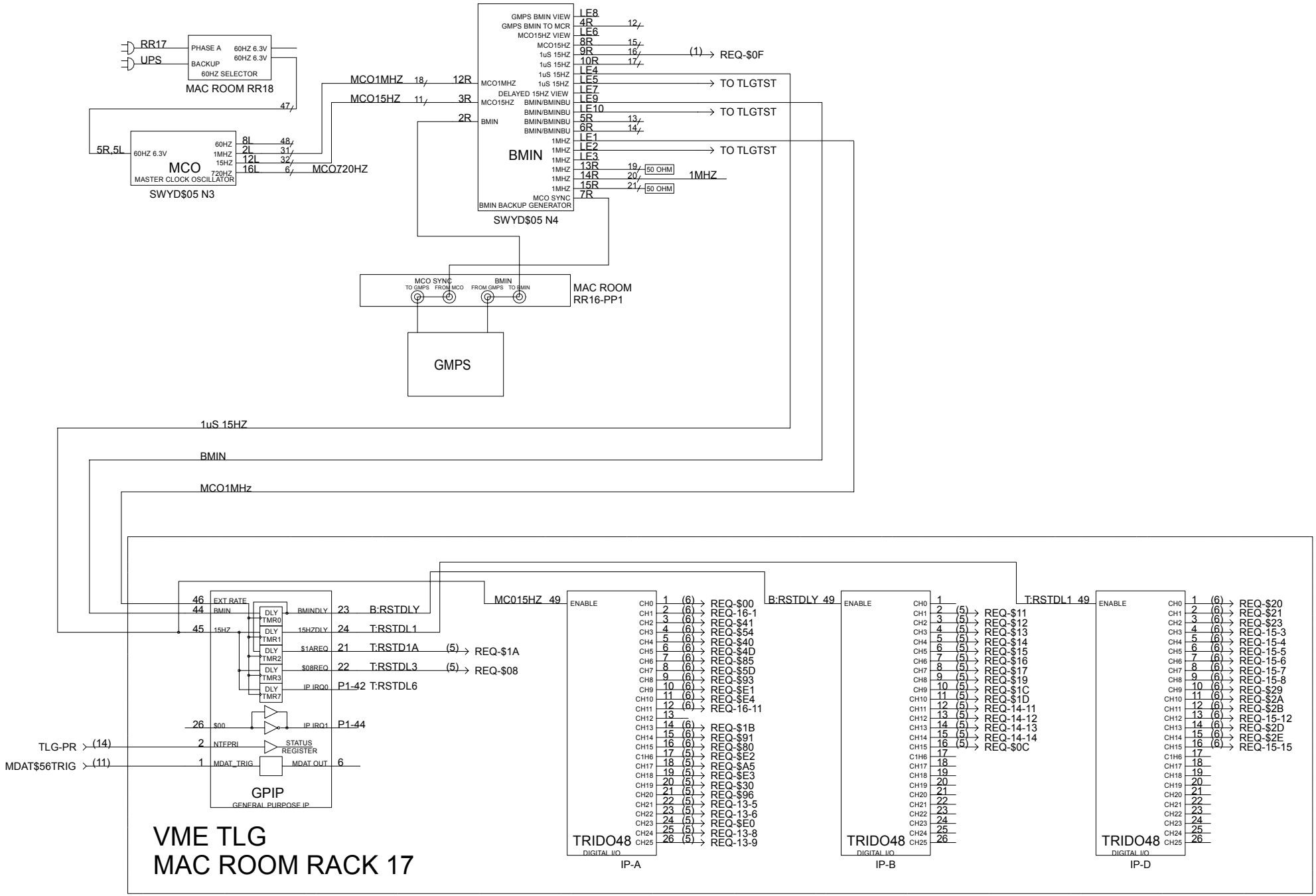
RR17
UPS
PHASE A
BACKUP
60HZ 6.3V
60HZ 6.3V
60HZ SELECTOR
MAC ROOM RR18
MCO1MHZ
MCO15HZ
MCO720HZ
5R,5L
60HZ 6.3V
MCO
MASTER CLOCK OSCILLATOR
SWYD$05 N3
BMIN
SWYD$05 N4
GMPS BMIN VIEW
GMPS BMIN TO MCR
MCO15HZ VIEW
DELAYED 15HZ VIEW
BMIN/BMINBU
MCO SYNC
BMIN BACKUP GENERATOR
REQ-$0F
TO TLGTST
TO TLGTST
TO TLGTST
50 OHM
1MHZ
MCO SYNC
BMIN
MAC ROOM
RR16-PP1
GMPS
1uS 15HZ
BMIN
MCO1MHz
MC015HZ 49
B:RSTDLY 49
T:RSTDL1 49
EXT RATE
BMIN
15HZ
BMINDLY
15HZDLY
$1AREQ
$08REQ
IP IRQ0
IP IRQ1
$00
NTFPRI
MDAT_TRIG
STATUS REGISTER
MDAT OUT
B:RSTDLY
T:RSTDL 1
T:RSTD1A
T:RSTDL3
P1-42 T:RSTDL6
P1-44
REQ-$1A
REQ-$08
TLG-PR
MDAT$56TRIG
GPIP
GENERAL PURPOSE IP
ENABLE
TRIDO48
DIGITAL I/O
IP-A
IP-B
IP-D
REQ-$00
REQ-16-1
REQ-$41
REQ-$54
REQ-$40
REQ-$4D
REQ-$85
REQ-$5D
REQ-$93
REQ-$E1
REQ-$E4
REQ-16-11
REQ-$1B
REQ-$91
REQ-$80
REQ-$E2
REQ-$A5
REQ-$E3
REQ-$30
REQ-$96
REQ-13-5
REQ-13-6
REQ-$E0
REQ-13-8
REQ-13-9
REQ-$11
REQ-$12
REQ-$13
REQ-$14
REQ-$15
REQ-$16
REQ-$17
REQ-$19
REQ-$1C
REQ-$1D
REQ-14-11
REQ-14-12
REQ-14-13
REQ-14-14
REQ-$0C
REQ-$20
REQ-$21
REQ-$23
REQ-15-3
REQ-15-4
REQ-15-5
REQ-15-6
REQ-15-7
REQ-15-8
REQ-$29
REQ-$2A
REQ-$2B
REQ-15-12
REQ-$2D
REQ-$2E
REQ-15-15
VME TLG
MAC ROOM RACK 17

Timeline for Pbar Production Cycles

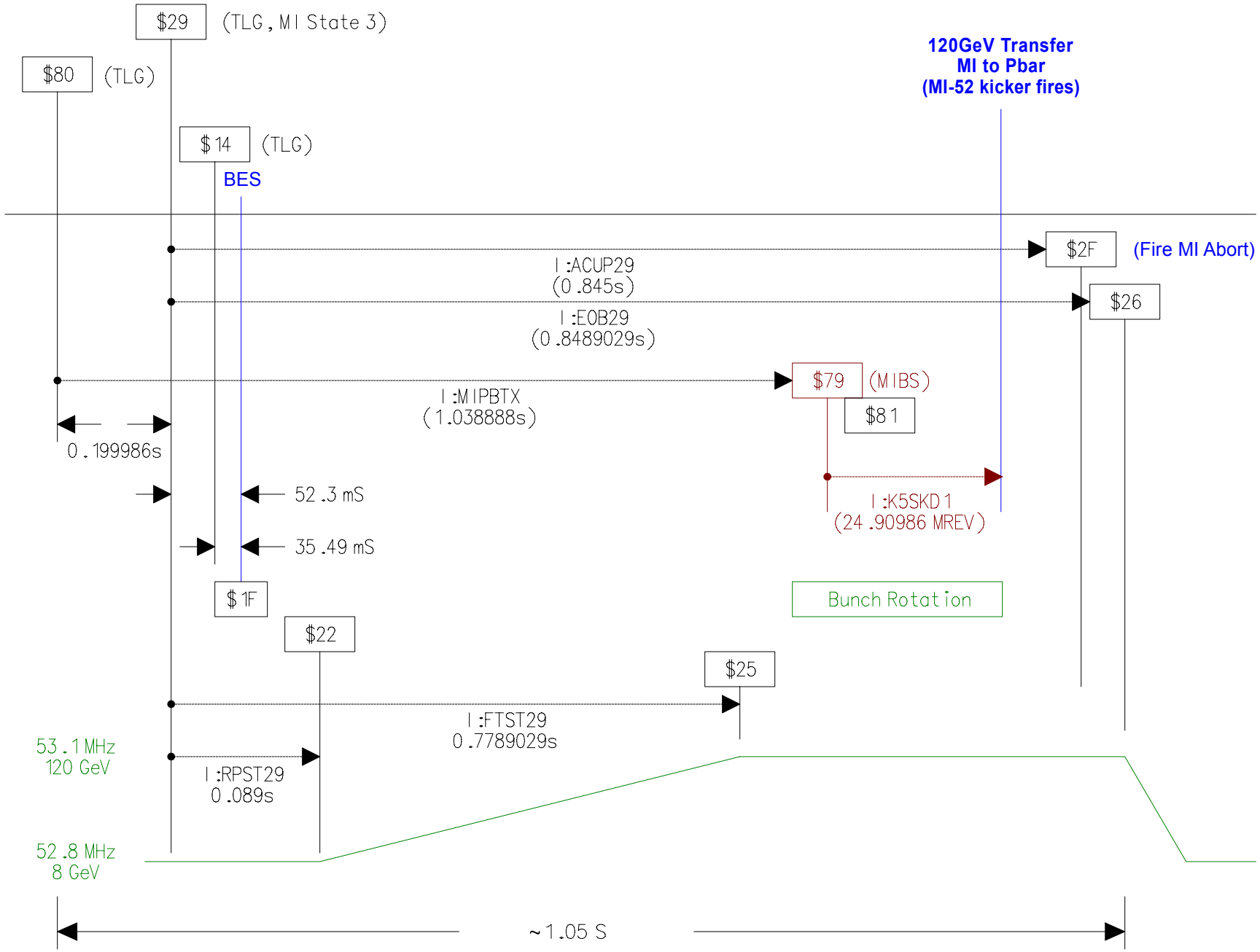

G. Vogel 6-19-03

Timeline for Tevatron Proton Injection Cycles

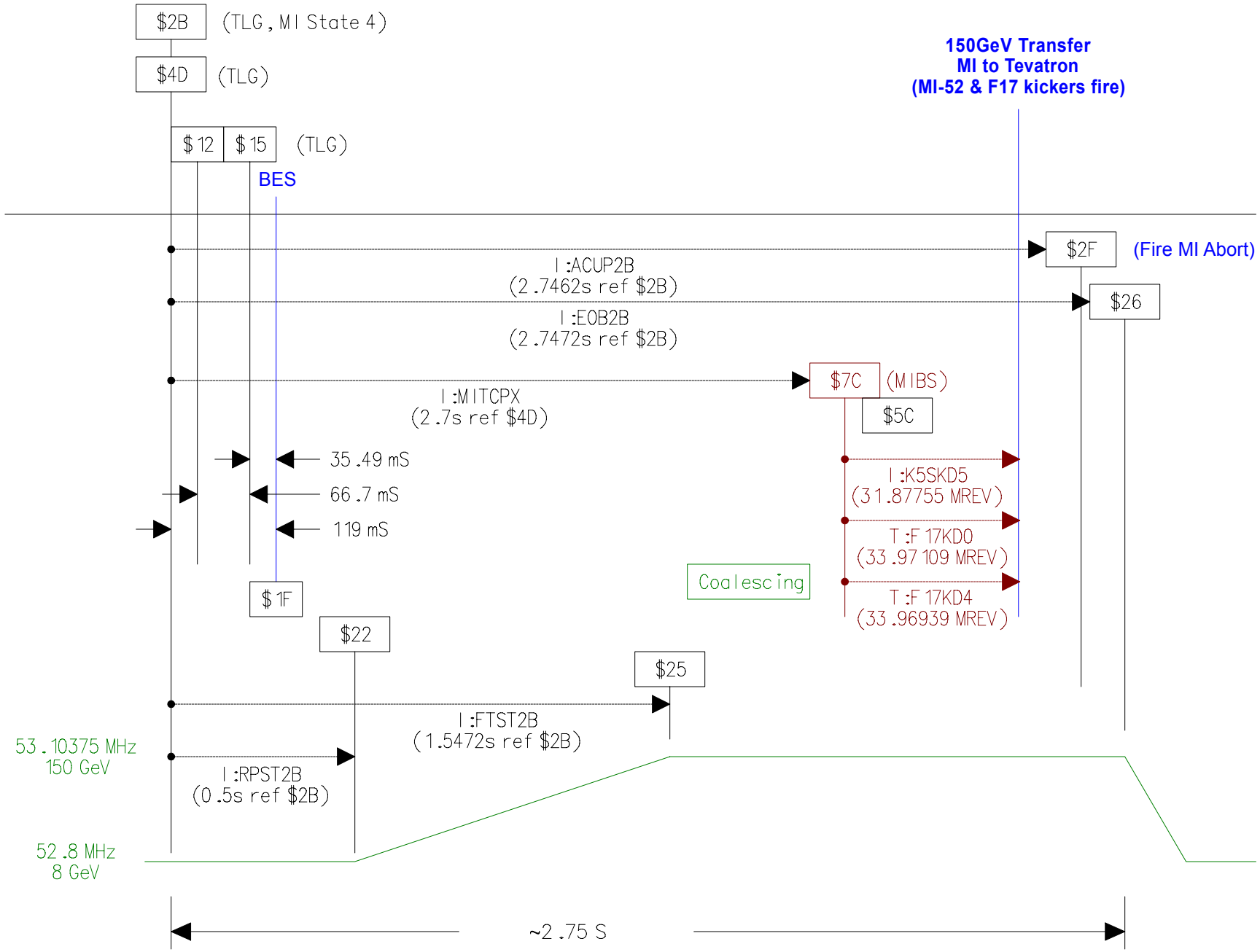

G. Vogel 6-19-03