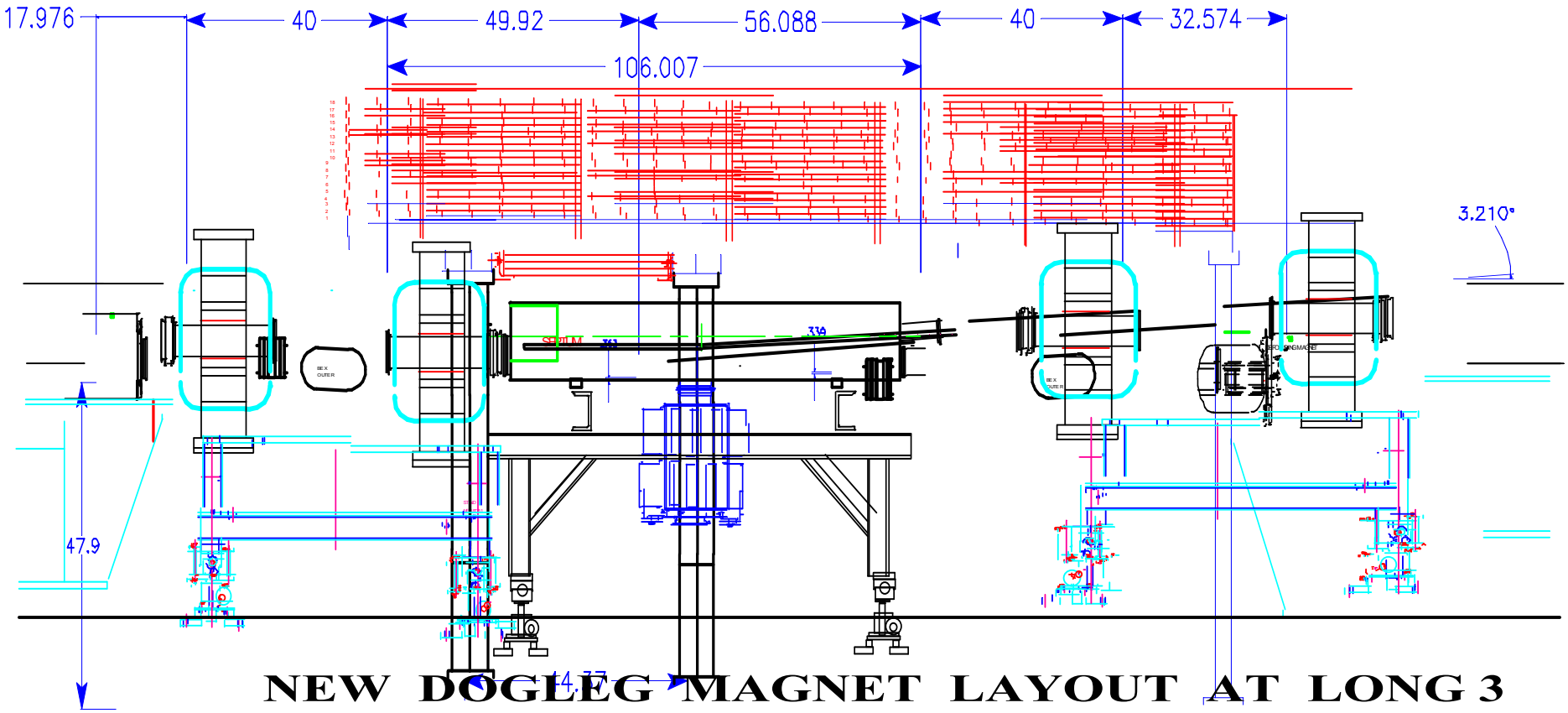

NEW DOGLEG MAGNET LAYOUT AT LONG 3