7835 Measurements Page 1-2

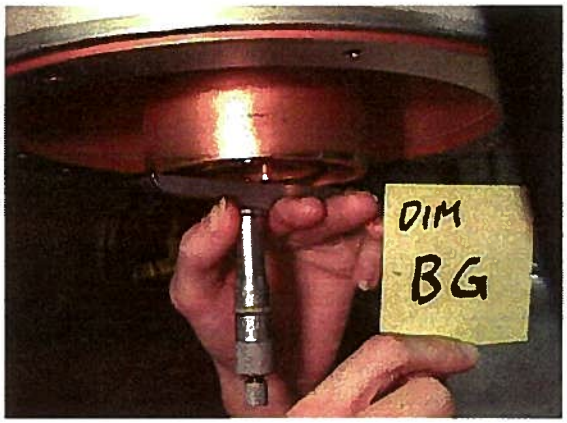

Dimension BG is measured from the bottom of the inside filament connector to the bottom of the outside filament connector.

0 - 1 INCH

Dimension M is measured from the bottom of the outside filament connector to the absolute farthest distance in between the inner and outer filament rings, at the flat part where the four spanner wrench holes are.

3-4 INCH

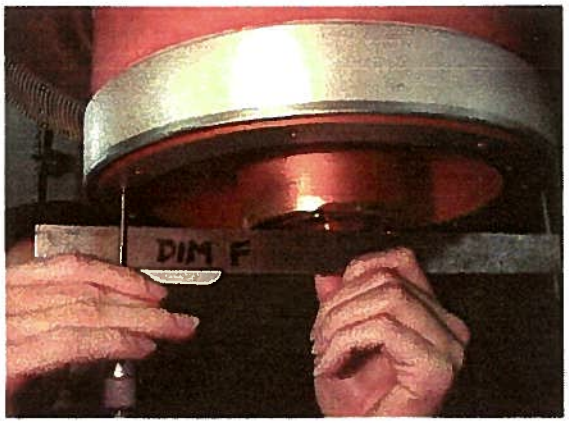

Dimension F is measured from the bottom of the outer filament ring to the bottom of the grid ring (flat area on the outermost side of the tube.
Use the one (1) inch space bar and subtract 1 inch form your measurement.

1-2 INCH

7835 Measurements Page 2 -2

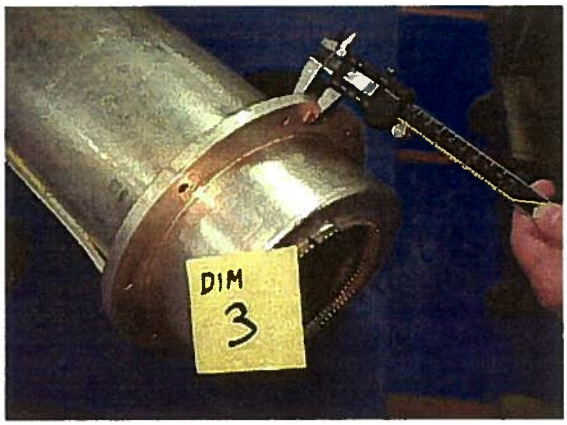

Dimension 3 is usually kept in the front few pages of the 7835 installation log book . It refers to the serial number of the cavity. If it cannot be found, take four measurements around the outside ring of the slave cavity and divide by four.

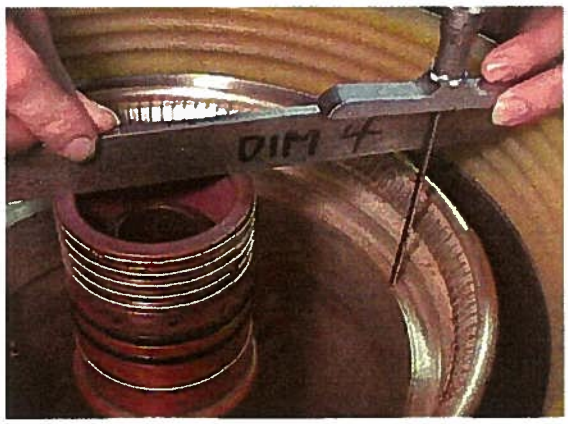

Dimension 4 is the distance between the absolute top of the outer filament connector to the last inner ridge of the output cavity where the slave cavity rests when the tube is inserted.
Use the one (1) inch space bar and subtract 1 inch form your measurement.

4-5

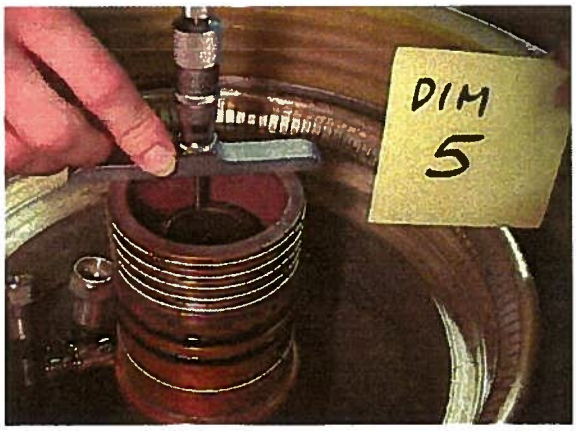

Dimension 5 is the distance from the absolute top of the outer filament ring to the absolute top of the inner filament ring.

0-1

7835 Installation Data Sheet

Measured	Dim BG	Dim M	Dim 3	Dim F	Dim 4	Dim 5
Reading 1						
Reading 2						
Reading 3						
Reading 4						
Average			See reference value			
Expected Value	0.0400	4.0000	0.5	0.6450	3.5900	0.9310

PA Socket Number	7835 Serial Number	Date

1. 7835 DATA (inches)

(Reference Drawing 0230 - MB - 4721)	Measured	* Nominal	Error (Mes-Nom)
Dim BG (Inner Filament Extension) w/s Outer Filament		0.0400	
Dim M (Outer Filament length)		4.0000	
Dim 3 (7835 elevation) w/s Socket Seat		0.5000	
Dim F (Outer Filament extension)		0.6450	

* Nominal measured value was within +/- .015 of 75% of sample

2. Calculations

Dim 4 (Socket Outer Filament height)	3.590 + **(Err M + Err 3 - Err F)**	
Dim 5 (Socket Inner filament depth)	.931 + **(Err M - Err BG)**	

3. Socket Data and Results

Dim4 (Measured)		
Dim4 (Calculated)		
Error **Dim 4** (Measured - Calculated)	Tolerance +.030 / -.060	

Dim 5 (Measured)		
Dim 5 (Calculated)		
Error **Dim 5** (Measured - Calculated)	Tolerance +/- .010	

Printed 9/6/2005 1:40 PM

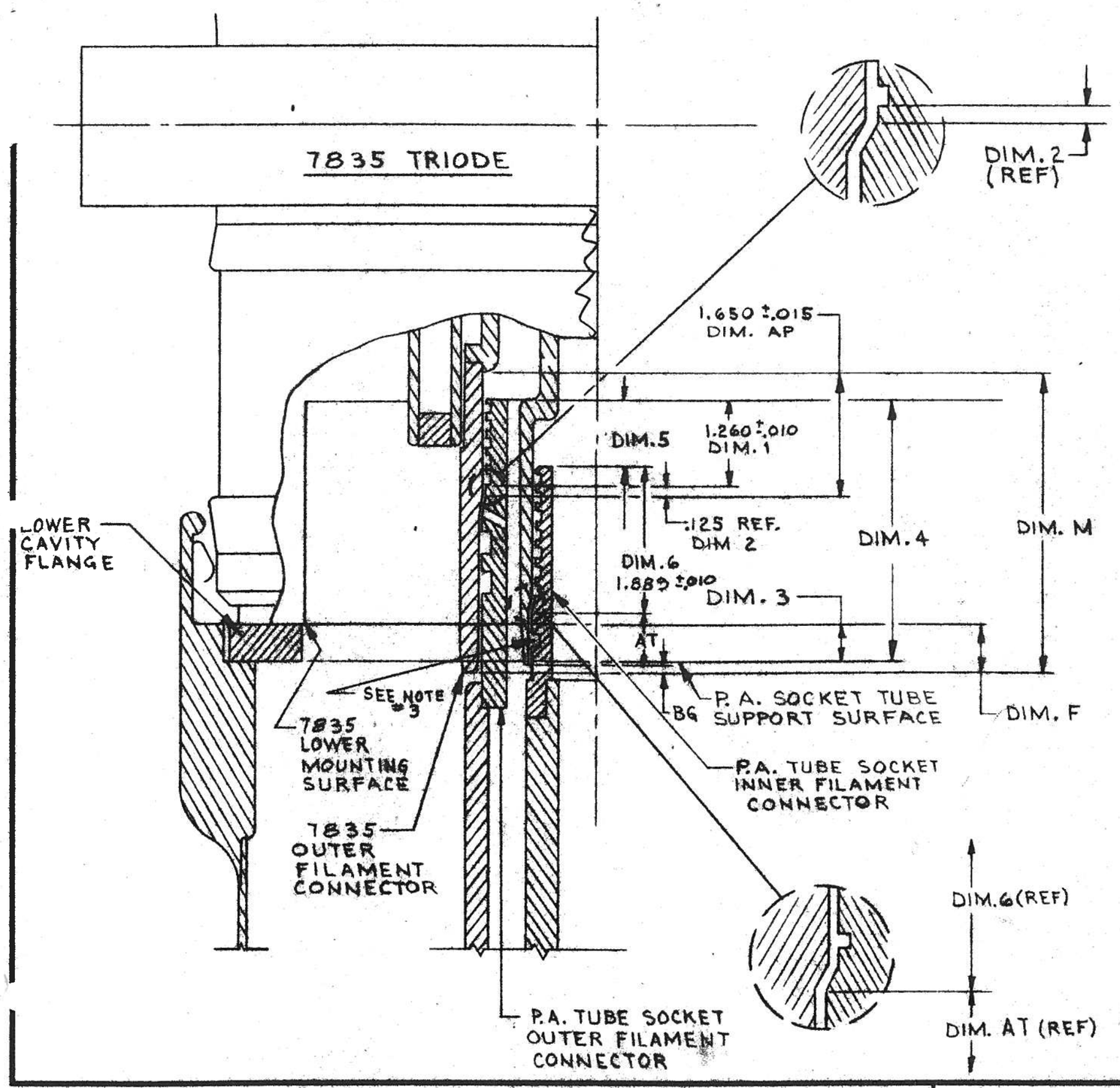

REVISIONS				
SYM	DESCRIPTION	DRAWN / APPD.	DATE / DATE	FILMED

NOTES:

1. DIM. 4 = DIM. M + DIM. 1 + DIM. 2 + DIM. 3 - DIM. F - DIM. AP.
2. DIM. 5 = 4 - AT - BG + F - 3 + 6.
3. OMIT INNER "O" RING.

ITEM NO.	PART NO.	DESCRIPTION	QTY. REQ.

PARTS LIST

UNLESS OTHERWISE SPECIFIED			ORIGINATOR		
FRACTIONS	DECIMALS	ANGLES	DRAWN	G. ZIBRUN	2-25-71
± —	± —	± —	CHECKED		
			APPROVED	R Winger	2-25-71
			APPROVED		

1. BREAK ALL SHARP EDGES 1/64 MAX.
2. DO NOT SCALE DWG.
3. DIMENSIONING IN ACCORD WITH USASI Y14.5 STD's.

√ MAX. ALL MACHINED SURFACES

USED ON

MATERIAL - —

NATIONAL ACCELERATOR LABORATORY
U.S. ATOMIC ENERGY COMMISSION

DETERMINATION OF SOCKET DIMENSION REQUIRED FOR NON-INTERFERENCE SEATING OF A 7835

SCALE	FILMED	DRAWING NUMBER	REV.
—		0230·MB-4721	

BRUNING 40-107