REV.	DESCRIPTION	DRAWN	DATE
		APPD.	DATE
A	CHANGED	TONIUS	4-23-86

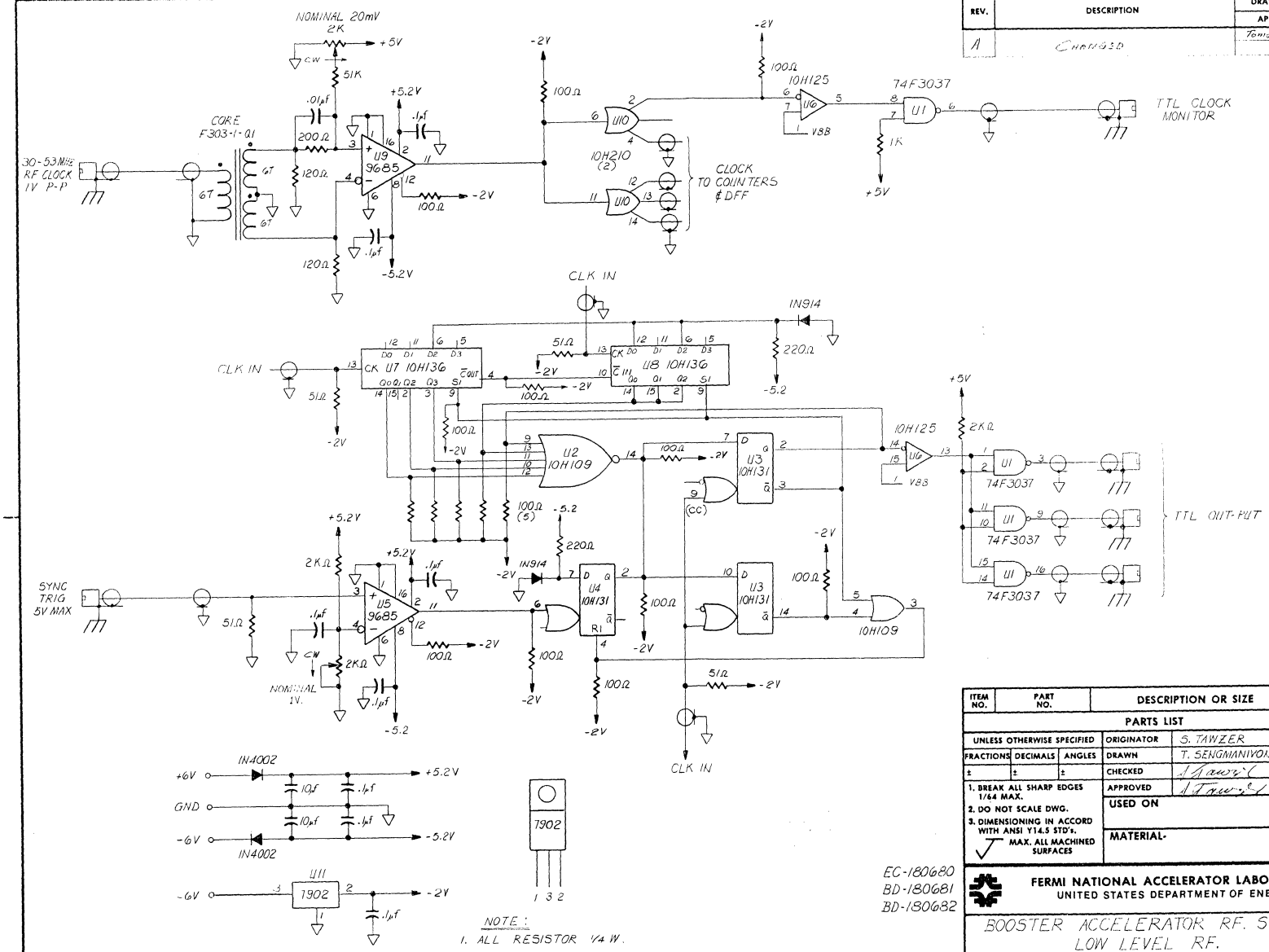

NOTE:
1. ALL RESISTOR 1/4 W.

ITEM NO.	PART NO.	DESCRIPTION OR SIZE	QTY. REQ.
PARTS LIST			

UNLESS OTHERWISE SPECIFIED			ORIGINATOR	S. TAWZER	11-25-85
FRACTIONS	DECIMALS	ANGLES	DRAWN	T. SENGMANIVONG	01-02-85
±	±	±	CHECKED		
1. BREAK ALL SHARP EDGES 1/64 MAX.			APPROVED		
2. DO NOT SCALE DWG.			USED ON		
3. DIMENSIONING IN ACCORD WITH ANSI Y14.5 STD's.			MATERIAL-		
MAX. ALL MACHINED SURFACES					

EC-180680
BD-180681
BD-180682

FERMI NATIONAL ACCELERATOR LABORATORY
UNITED STATES DEPARTMENT OF ENERGY

BOOSTER ACCELERATOR RF. SYSTEM
LOW LEVEL RF.
30 TO 53 MHz DIVIDE BY 84

SCALE	FILMED	DRAWING NUMBER	REV.
	F/86	0331.00-EC-180680	A

BRUNING-40-107

FA7/86