THIS DRAWING IS UNPUBLISHED. RELEASED FOR PUBLICATION .19 .
© COPYRIGHT 19 BY AMP INCORPORATED. ALL RIGHTS RESERVED.

LOC	DIST
DY	-

REVISIONS

P	LTR	DESCRIPTION	DATE	DWN	APVD
	J	REVISED FP00-0083-03	21MAY03	LWY	LSF

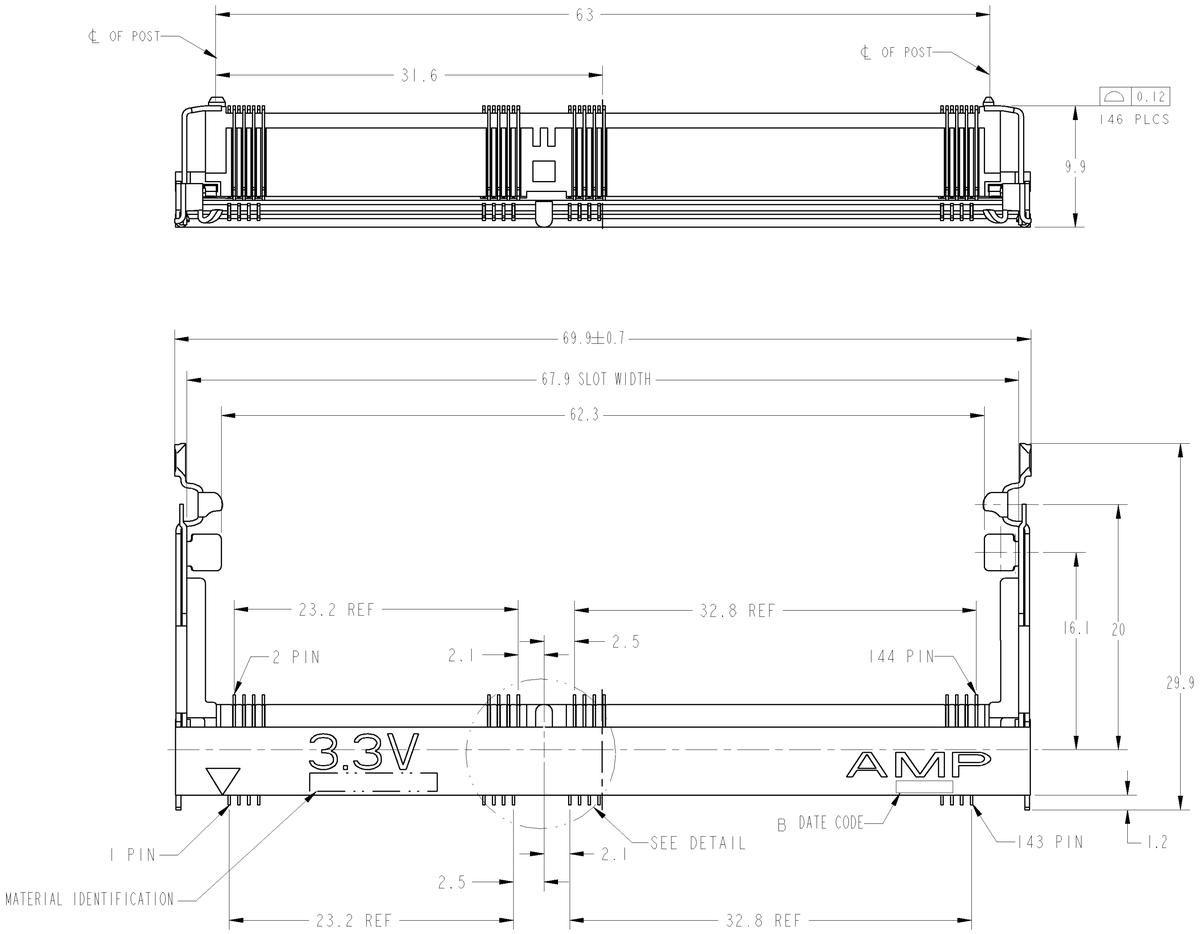

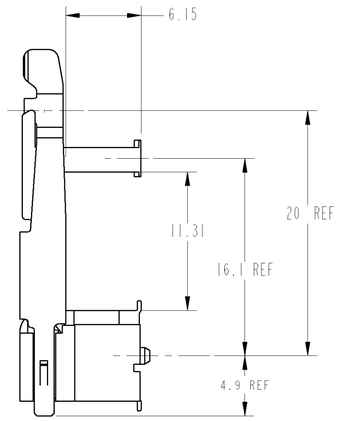

1. MATERIAL, HOUSING, HIGH TEMP. PLASTIC, UL94V-O
   CONTACT: COPPER ALLOY
   LOCK LEVER: SUS301 TIN PLATING.
2. FINISH; CONTACT AREA: 0.00025 MIN GOLD PLT ON
   0.001 MIN ALL OVER NICKEL
   SOLDERING AREA: 0.00005 MIN TO 0.00030 MAX GOLD PLATE
3. TOLERANCES NON-ACCUMULATIVE.
4. DIMENSIONING TO MODULE CENTER LINE.
5. PART PACKAGING PER EIA-IS-704 STANDARD REEL
   DIAMETER SHALL BE 330mm. TAPE WIDTH SHALL
   BE 88mm AND TAPE PITCH SHALL BE 36mm

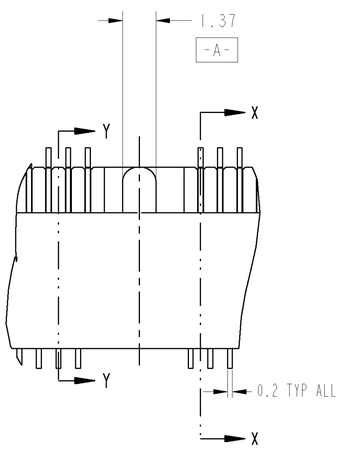

DETAIL B
SCALE 8:1

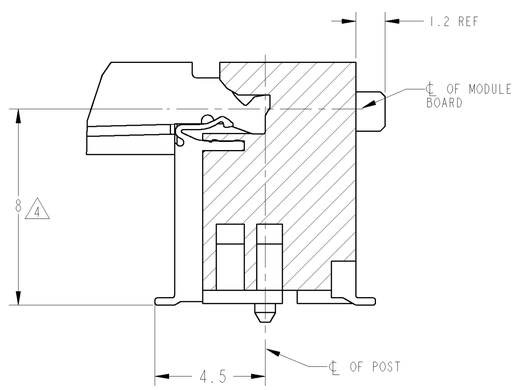

SECTION X-X
SCALE 8:1
90° ROTATE

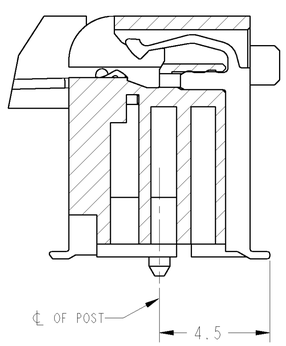

SECTION Y-Y
SCALE 8:1
90° ROTATE

REMARKS	POWER SUPPLY	POS	PART NUMBER
AVAILABLE	SDRAM 3.3V	144	6-390322-1 5
AVAILABLE	SDRAM 3.3V	144	390322-1

THIS DRAWING IS A CONTROLLED DOCUMENT FOR AMP INCORPORATED. IT IS SUBJECT TO CHANGE AND THE CONTROLLING ENGINEERING ORGANIZATION SHOULD BE CONTACTED FOR THE LATEST REVISION.

DIMENSIONS: mm

TOLERANCES UNLESS OTHERWISE SPECIFIED:
0 PLC ±-
1 PLC ±0.2
2 PLC ±0.2
3 PLC ±0.2
4 PLC ±-
ANGLES ±-

MATERIAL - 1
FINISH - 2

DWN J BURWELL 8NOV99
CHK K KREIDLER 22JUL99
APVD SF LEONG
PRODUCT SPEC -
APPLICATION SPEC -
WEIGHT -
CUSTOMER DRAWING

AMP MANUFACTURING (SINGAPORE) PTE. LTD.

NAME S.O.DIM SOCKET ASSY, 0.8mm PITCH
144 POS., 8mm PROFILE
FOR SDRAM TYPE MODULE

SIZE A1 | CAGE CODE 00779 | DRAWING NO C-390322
SCALE 4:1 | SHEET 1 OF 2 | REV J

THIS DRAWING IS UNPUBLISHED. RELEASED FOR PUBLICATION .19 .
© COPYRIGHT 19 BY AMP INCORPORATED. ALL RIGHTS RESERVED.

LOC	DIST
DY	-

REVISIONS

P	LTR	DESCRIPTION	DATE	DWN	APVD
	-	SEE SHEET 1	-	-	-

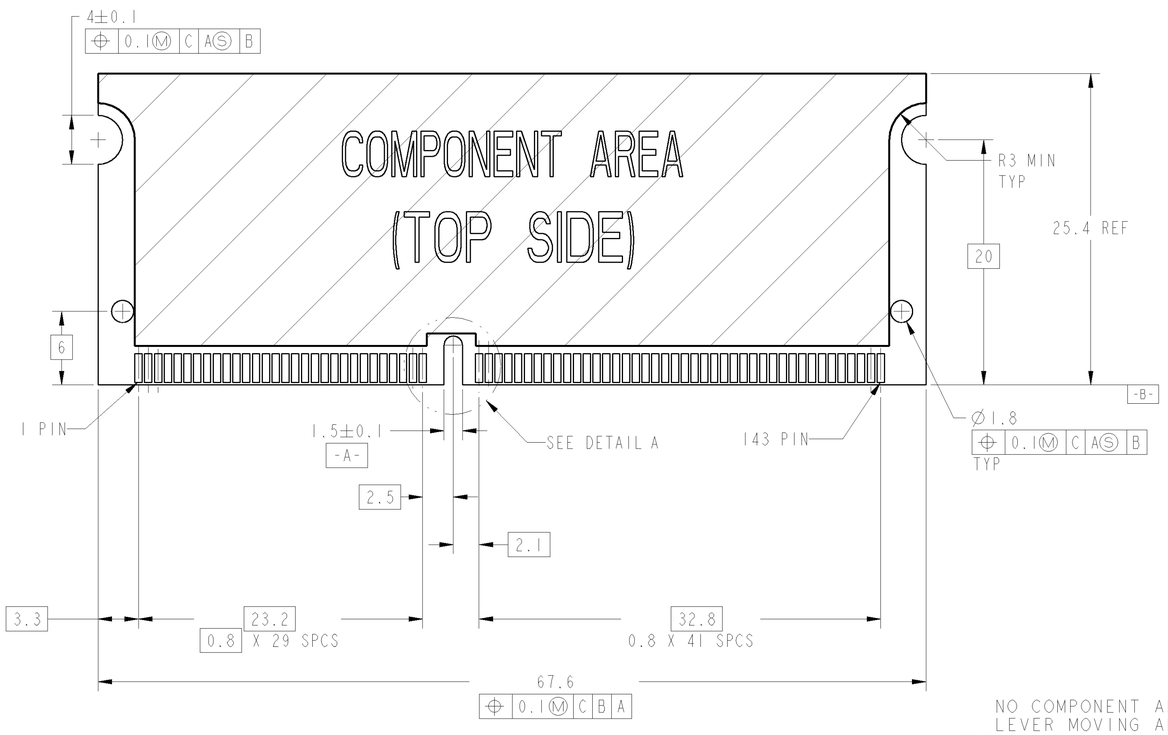

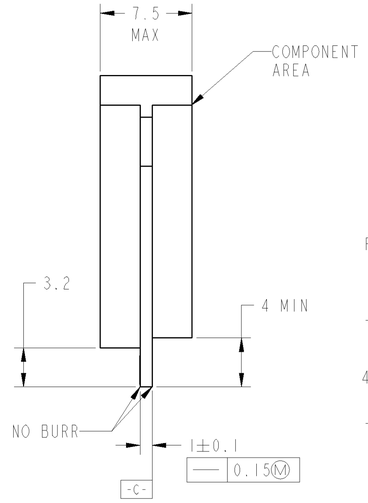

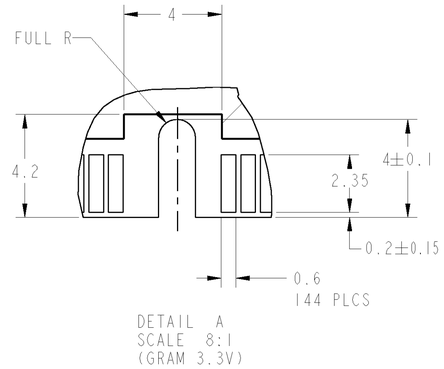

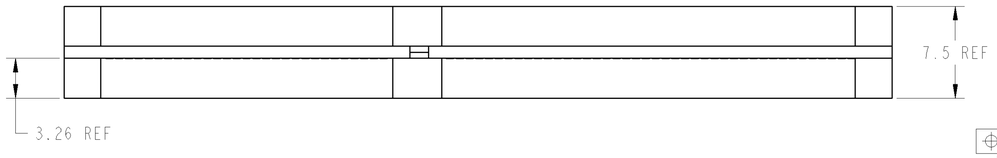

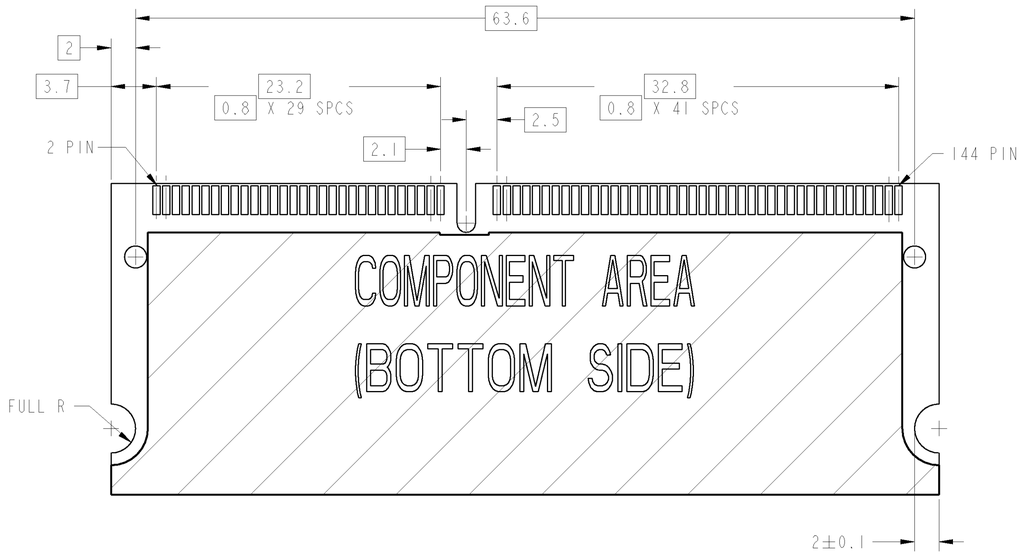

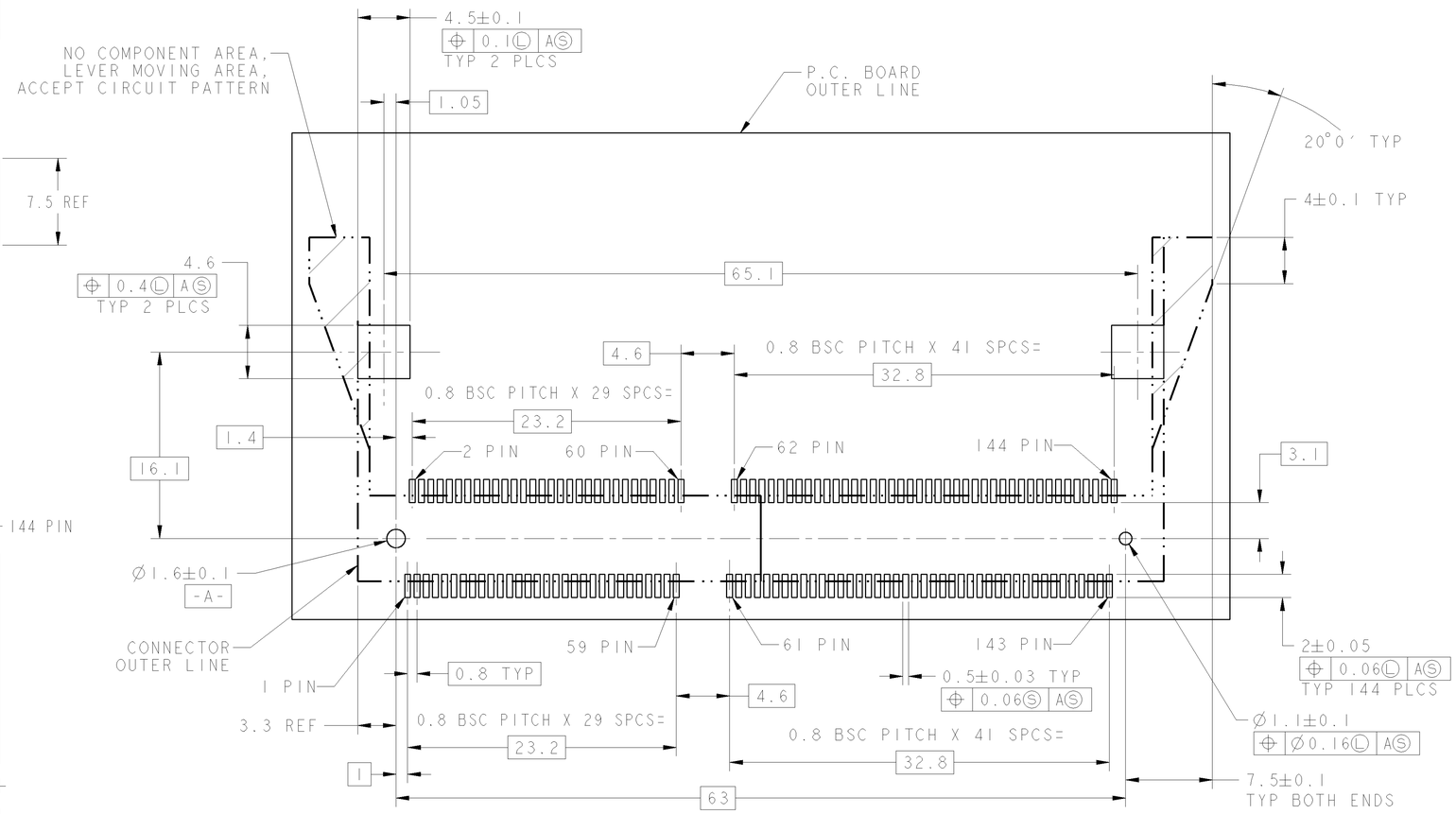

RECOMMENDED P.C. BOARD PATTERN LAYOUT
(CONNECTOR MOUNTING SIDE)

THIS DRAWING IS A CONTROLLED DOCUMENT FOR AMP INCORPORATED. IT IS SUBJECT TO CHANGE AND THE CONTROLLING ENGINEERING ORGANIZATION SHOULD BE CONTACTED FOR THE LATEST REVISION.

DIMENSIONS: mm

TOLERANCES UNLESS OTHERWISE SPECIFIED:
0 PLC ±
1 PLC ±0.2
2 PLC ±0.2
3 PLC ±0.2
4 PLC ±
ANGLES ±°

MATERIAL -
FINISH -

DWN J BURWELL 01FEB01
CHK K KREIDLER 23JUL99
APVD SF LEONG
PRODUCT SPEC -
APPLICATION SPEC -
WEIGHT -

AMP — AMP MANUFACTURING (SINGAPORE) PTE. LTD.

NAME S.O.DIMM SOCKET ASSY, 0.8mm PITCH 144 POS., 8mm PROFILE FOR SDRAM TYPE MODULE

SIZE A1 | CAGE CODE 00779 | DRAWING NO C-390322

CUSTOMER DRAWING | SCALE 4:1 | SHEET 2 OF 2 | REV J