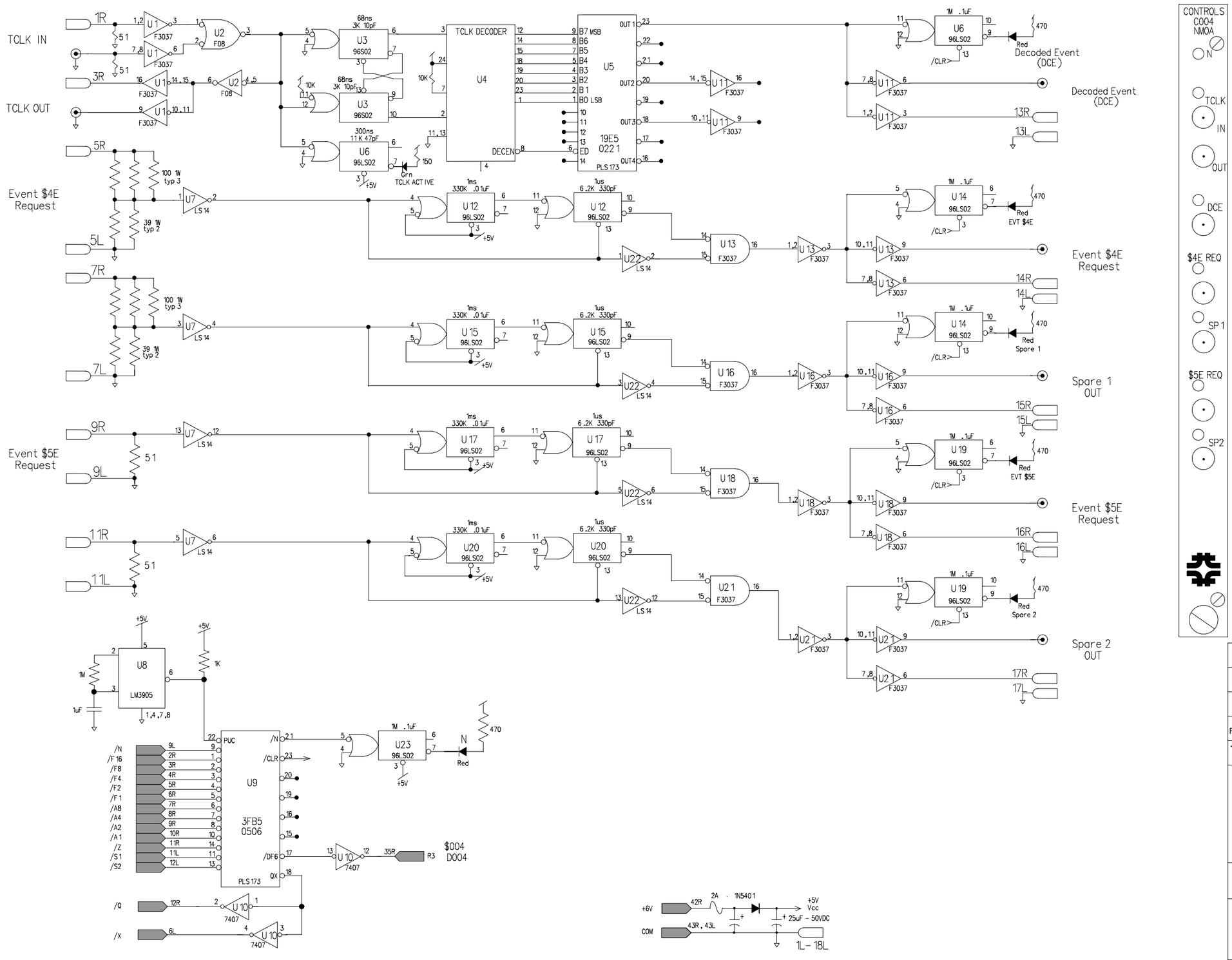

ITEM NO.	PART NO.	DESCRIPTION or SIZE	QTY. REQ.

PARTS LIST

UNLESS OTHERWISE SPECIFIED			ORIGINATOR	R. Crouch	10/28/02
FRACTIONS	DECIMALS	ANGLES	DRAWN	R. Crouch	10/28/02
+ -	+ -	+ -	LAST REVISED	R. Crouch	10/28/02
			APPROVED	**Greg Vogel**	XX/XX/XX

USED ON

ENTER PROJECT CATEGORY HERE, 0.08"

Source Reference:

ENTER ORIGINAL REFERENCE HERE, 0.08"

FERMI NATIONAL ACCELERATOR LABORATORY

UNITED STATES DEPARTMENT OF ENERGY

CAMAC 004 Module
NMOA (Not Much of Anything)

SCALE		DRAWING NUMBER	REV.
1:1		\\atlas\d:\autosketch-aid\11x17 B blank.skf	**A**