TITLE	BD & QXR CAMAC FOR REV C NNSLD
COMPANY	Fermilab
DESIGNER	Paul Kasley
SIZE FV	NUMBER 1.00 REV A
DATE 10:12a 2-04-1999	SHEET 1 OF 1

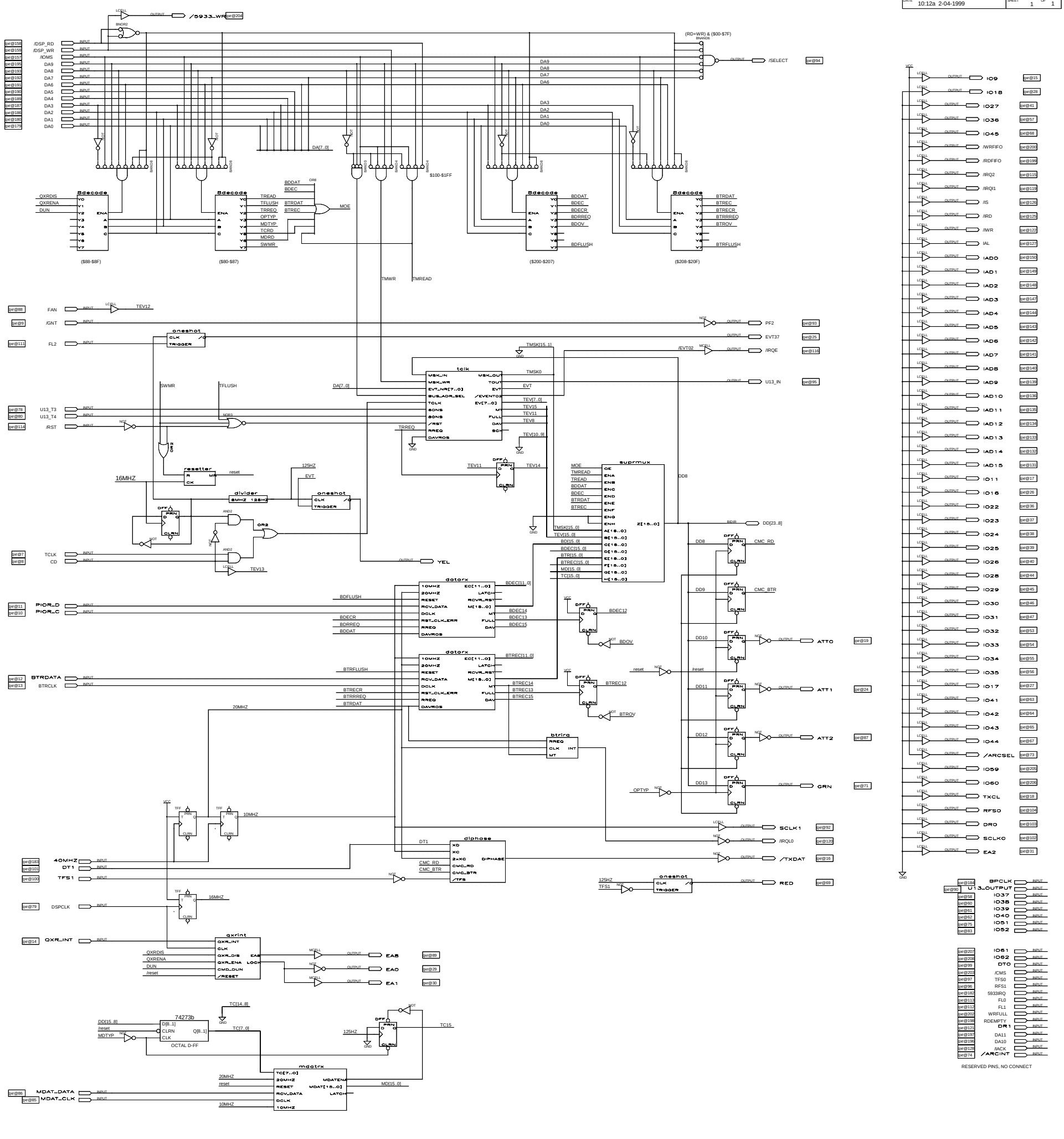

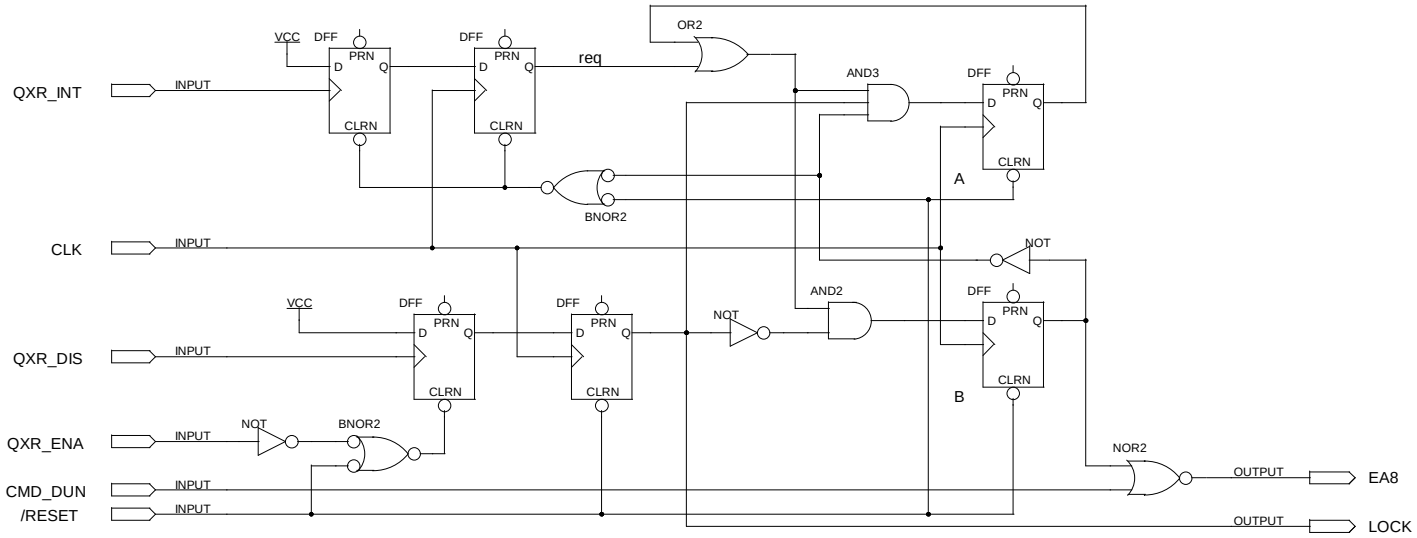

When lock is active, QXR interrupts are latched and saved until lock is inactive.
PCI interrupts from the DSP can occur only while lock is active.