REV.	DESCRIPTION	DRAWN	DATE
		APPD.	DATE

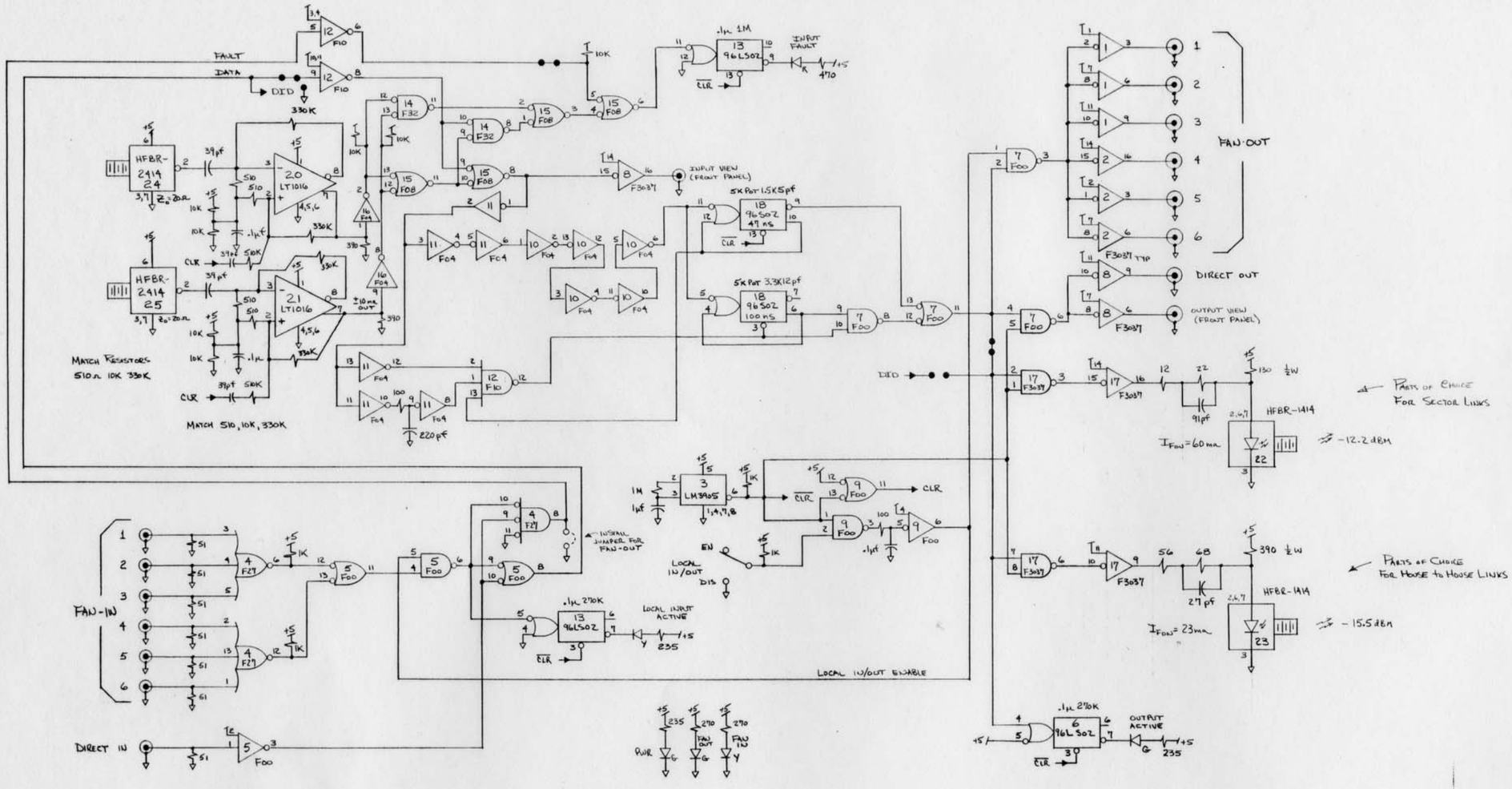

FOR FAN-OUT MODULE

REMOVE IC #4 (F27)
GROUND #4-8
INSTALL #1 + #2 (F3037)
REMOVE 6 x 51Ω RESISTORS AT INPUTS

FOR FAN-IN MODULE

REMOVE #1 + #2 (F3037)
INSTALL IC #4 (F27)
INSTALL 6 x 51Ω RESISTORS AT INPUTS
REMOVE #4-8 GROUND

NOTES:

1. SPARE ACTIVE GATE INPUTS - PULL TO +5V DIRECT
2. SPARE UNUSED GATE INPUT - PULL TO +5V OR GND AS APPROPRIATE.

ALTERNATE POWER UP CLEAR FOR LT1016'S ONLY

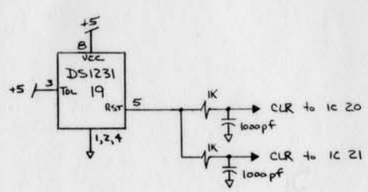

ITEM NO.	PART NO.	DESCRIPTION OR SIZE	QTY. REQ.
		PARTS LIST	

UNLESS OTHERWISE SPECIFIED			ORIGINATOR	R. DUCAR	12-6-88
FRACTIONS	DECIMALS	ANGLES	DRAWN		
±	±	±	CHECKED		
1. BREAK ALL SHARP EDGES 1/64 MAX.			APPROVED	R. Ducar	3-29-89
2. DO NOT SCALE DWG.			USED ON		
3. DIMENSIONING IN ACCORD WITH ANSI Y14.5 STD's.			MATERIAL-		
√ MAX. ALL MACHINED SURFACES					

PRINTED CIRCUIT BOARD	
TITLE	DWG NO
SCHEMATIC	ED-218455
ASSEMBLY	BD-218456
MASTER DWG	BD-218457
ASSEMBLY DWG	
OUTLINE DWG	
SOLDER MASK	
SILKSCREEN	
PARTS LIST	

FERMI NATIONAL ACCELERATOR LABORATORY
UNITED STATES DEPARTMENT OF ENERGY

ACCELERATOR CONTROLS
FIBER OPTIC 10MBIT/SEC FAN IN/OUT REPEATER
SCHEMATIC RF-128

SCALE	FILMED	DRAWING NUMBER	REV.
		0818-ED-218455	

BRUNING-40-532