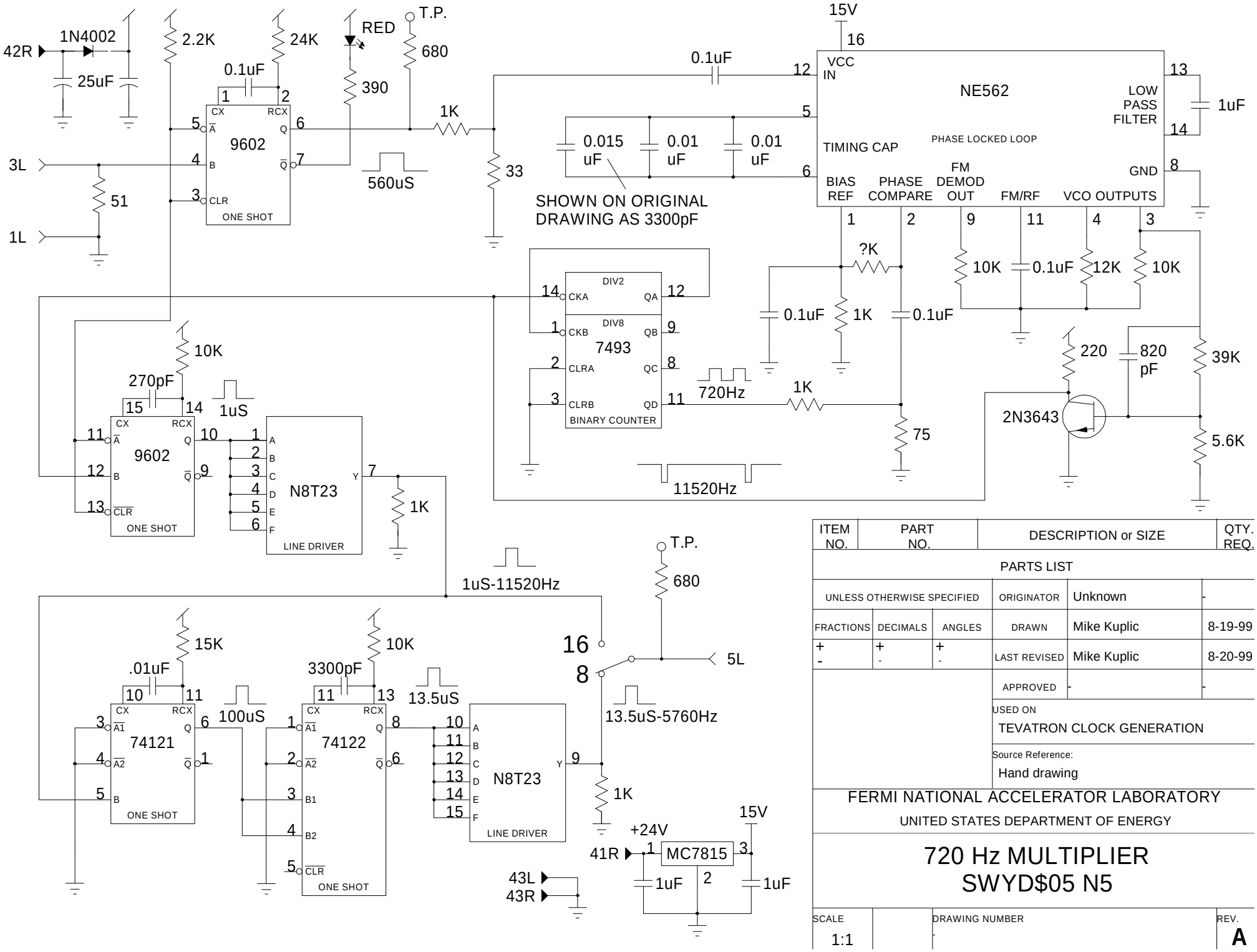

ITEM NO.	PART NO.	DESCRIPTION or SIZE	QTY. REQ.

PARTS LIST

UNLESS OTHERWISE SPECIFIED			ORIGINATOR	Unknown	-
FRACTIONS	DECIMALS	ANGLES	DRAWN	Mike Kuplic	8-19-99
+ -	+ -	+ -	LAST REVISED	Mike Kuplic	8-20-99
			APPROVED	-	-

USED ON
TEVATRON CLOCK GENERATION

Source Reference:
Hand drawing

FERMI NATIONAL ACCELERATOR LABORATORY
UNITED STATES DEPARTMENT OF ENERGY

720 Hz MULTIPLIER
SWYD$05 N5

SCALE		DRAWING NUMBER	REV.
1:1		-	A