Fermilab

PROCEDURE FOR CALIBRATING DIODE DETECTOR BOX

J. Reid

May, 1979

I. Equipment

A. Vector Voltmeter model 8405A H-P
B. DVM model 8600A Fluke
C. Sweeper model 5000A Kruse-Storke
D. Special Calibrated 20db pad Texcan FD-50
E. Power supply ±15V
F. Oscilloscope model 485 Tektronix
G. 1mwatt Reference model 435-K05 H-P
H. Pick-off Tee HP11536A
I. 50Ω Terminator HP908A
J. 3watt ENI RF Amplifier
K. Standard 20db PAD Texcan FD-50
L. Standard 10db PAD Texcan FD-50

II. Equipment set up for fix frequency calibration (53 MHz)

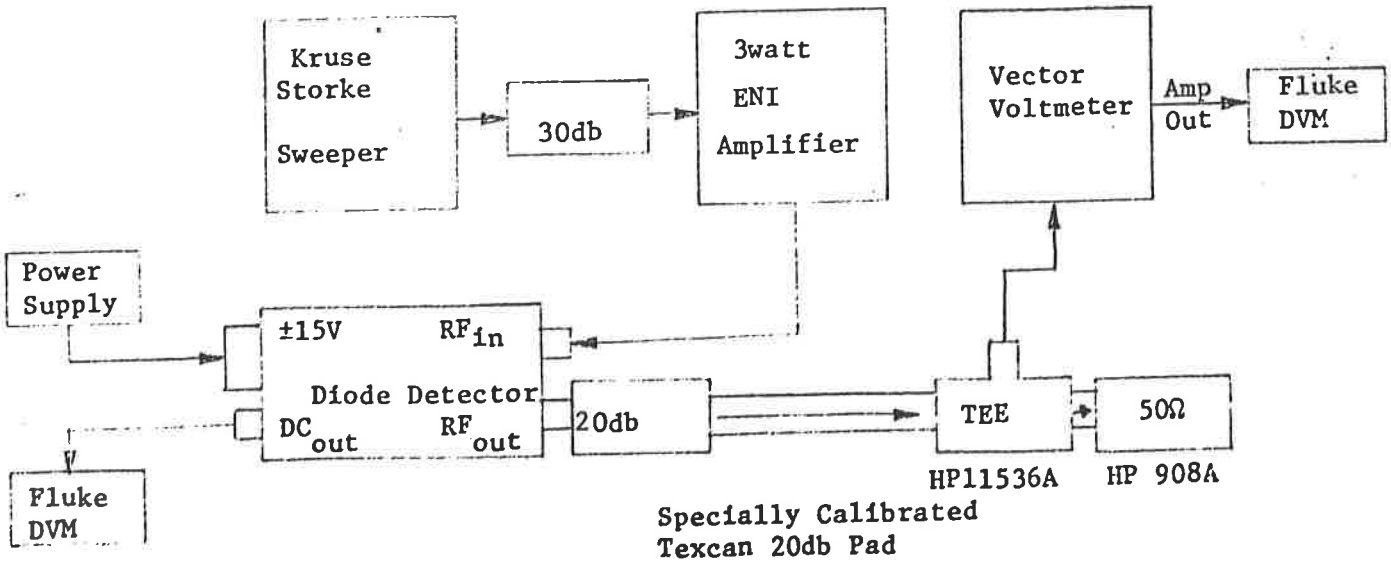

FIGURE 1

III. Fixed Frequency Calibration

A. 1mwatt 50 MHz reference is used to calibrate vector voltmeter

1) Feed reference into Pick-off TEE and 50Ω terminator

2) Vector voltmeter should read 224 millivolts. This is read on the DVM looking at the Analog Amplitude Output Jack

3) If it does not read 224 millivolts, the difference will be the error. Convert error to % and this must then be taken into amount in figuring the RF Voltage applied to the Diode Detector Box

B. Connect setup as shown in figure 1.

C. Zero adjustment

1) Disconnect RF input to Diode Detector Box

~~2) Short point 1 on p.c. board to ground using a short clip lead, see figure 2~~

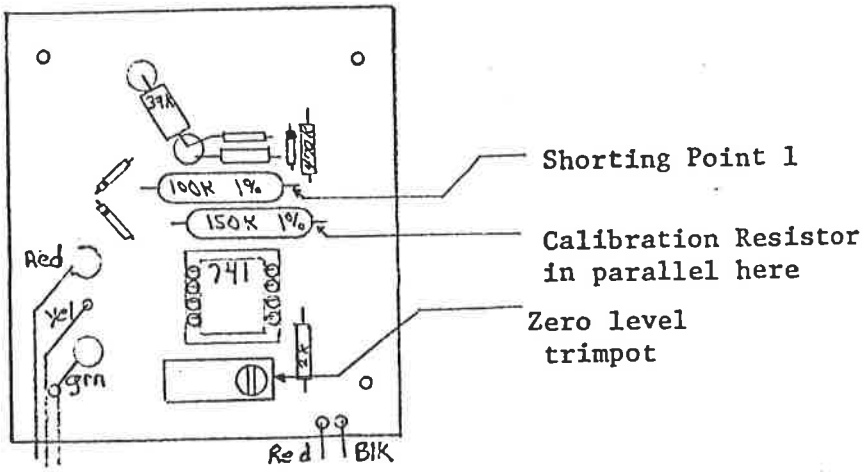

FIGURE 2

3) Turn power supply on

4) Adj. "zero level" trimpot for 0.00 volts on DVM at Diode Detector Output

5) After this is done, ~~remove clip lead and~~ connect RF input back to amplifier

D. Set sweeper to 53 MHz CW ~~and~~ RF level to 177 mv_{rms} on vector voltmeter (.559 on the DVM

E. Note output of Diode Detector Box

F. Solder a calibrating resistor (400K, etc.) in parallel with the 150KΩ, 10% resistor (see figure 2) so as the DVM on the output of the Diode Detector Box reads 5.00 ± .05 volts.

IV. Swept measurement of Diode Detector Box

A. Connect equipment as shown in Figure 3

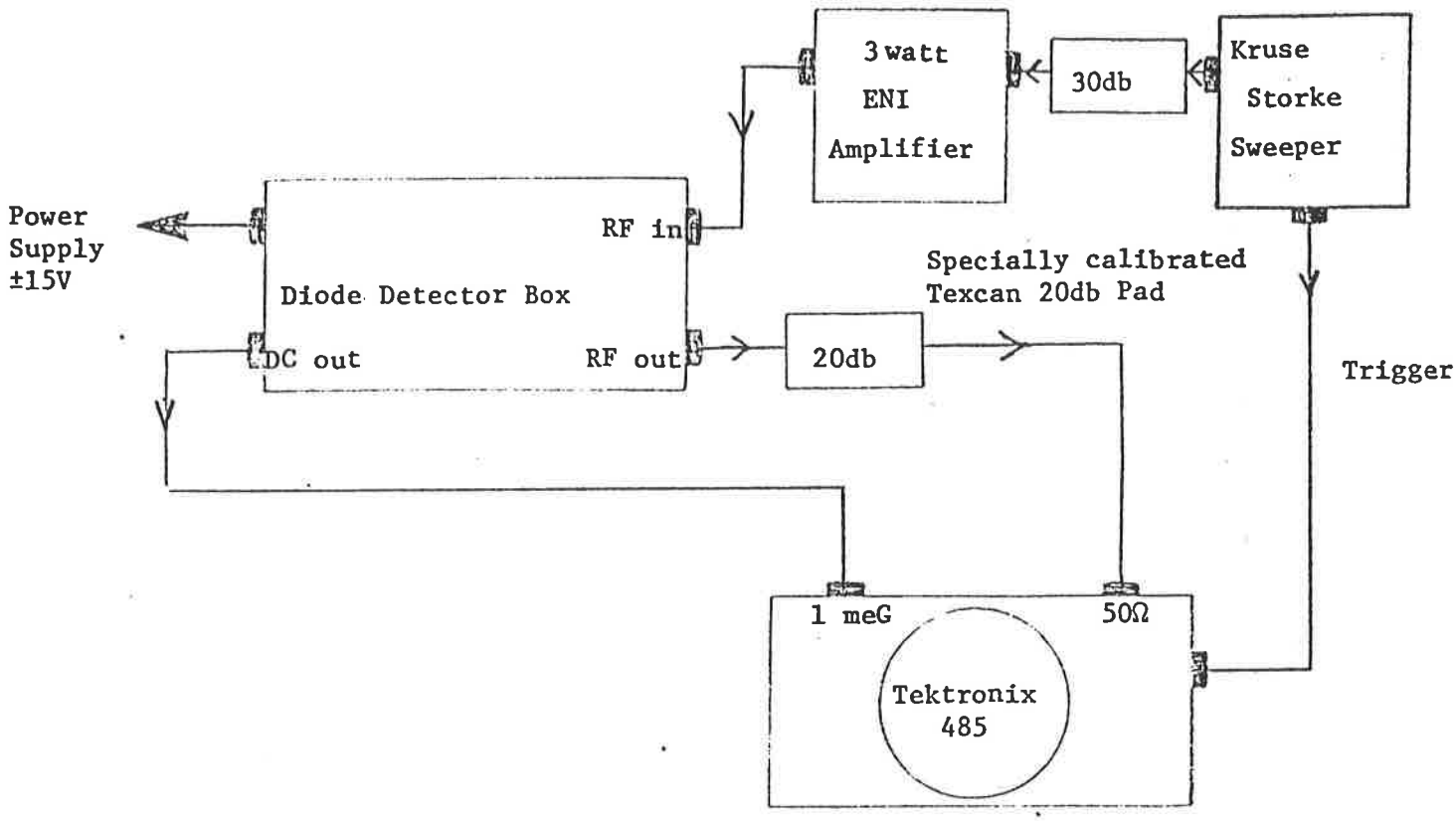

FIGURE 3

B. The H-P 1mwatt reference is used to calibrate Channel A of the oscilloscope

1) Feed reference into 20db + cable length into 50Ω scope

2) Oscilloscope should read .063 volts pk-pk. If not adjust gain of Channel A to give .063 volts pk-pk

3) Channel B is calibrated using the calibrator built into scope

4) System is now calibrated

C. Reconnect as shown in figure 3

D. Set sweeper to give .5V pk-pk on scope at 53MHz.

E. Set frequency to sweep from 20-100MHz

F. Set markers at 30 and 53MHz

G. Observe on scope that DC output of detector should follow pk-pk amplitude of RF envelope. Must be flat in 30-53MHz rang

H. Since the box has already been calibrated at fixed frequency, there will be no adjustment in the swept frequency mode. All this does is check the box as a function of frequency. See figure 4

V. Special notes:

A. There is approximately 150mvolts offset in the DC output of Diode Box with no RF input

B. Because of this, make sure when one is sweeping the Box, that the DC Ref line on the scope has been "zeroed" with bottom of the RF envelope

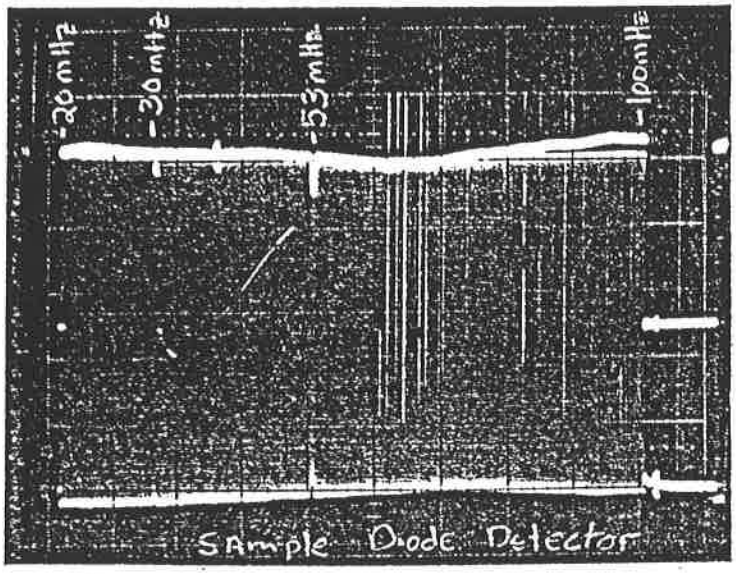

FIGURE 4

JR/nep

10-14-93
J.R.H.

Diode Detector Calibration Procedure

0333.00-EC-63620 Schematic
BC-63623 Assembly drawing
MC-63625 Box assembly

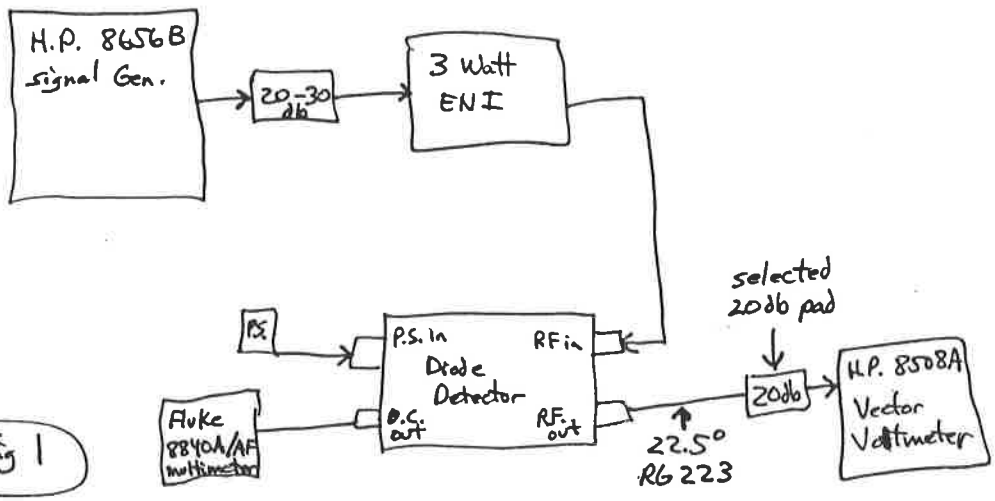

Fig 1

turn on all instruments and allow them to stabilize.
50MHz, 1 mW reference is used to calibrate vector voltmeter.
Connect 1 mW reference thru 22.5° RG 223 cable to vector voltmeter ref. input (Chan A). The vector voltmeter should read 224 mv rms if sufficiently warmed up.
If it does not read 224 mv, convert error to % and use to calculate the correct R.F. voltage applied to diode detector box. Inserting the selected 20db pad at the vector voltmeter ref input should reduce the voltage reading by a factor of 10, (224 mv rms → 22.4 mv rms)

Fixed Frequency Calibration

Connect setup as shown in Fig 1.
Solder a 500KΩ trimpot (as a reostat) across the 150KΩ feedback resistor. set the 500K pot for ≈ 400KΩ
Disconnect R.F. input to diode detector box and adjust 10K Trimpot for 0.000 volts D.C. out.
Connect R.F. input to diode detector and set frequency at 53 MHz, set amplitude so that the vector voltmeter reads as close to 177 mv rms as possible. If the vector voltmeter is calibrated correctly you can calculate what the D.C. output of the diode Detector box should be by (D.C. out = $20\sqrt{2}$ Vrms). Tweak 500KΩ pot to get the calculated D.C. out. Then disconnect the R.F. to the diode detector and re-zero the D.C. out, then connect the R.F. and Tweak the gain pot again for the calculated D.C. out. Repeat this procedure as needed until the D.C. offset with no R.F. input is less than 1 mv when the gain is correct.

The 500KΩ pot can be removed and replaced by a selected resistor if desired but this will be a pain because the resistance value will change from heating with a soldering iron. a drop of locktite on the pot should hold the calibration sufficiently.

Linearity Measurements.

Replace the H.P. 8656 B signal generator with the Systron Donner model 5000 A sweeper. Set sweeper for [redacted] 53 MHz CW. Adjust [redacted] amplitude so that the D.C. out of Diode detector is 1.00 V, record the rms voltage read on the vector voltmeter. Record the rms voltage for D.C. out = 2.00V, 3.00V ... 10.00 V. Plot the data points on a graph with D.C. out vs V_{rms} in [redacted] to see the linearity of the diode detector.

Go to page 3 of original Procedure writeup.