# Dump Heating_4

Ang Lee

Nov 9,2010

# Four options

a) Graphite core+ SS sleeve

b) Copper core + SS sleeve

c) Tungsten block

d) Graphite core + Tungsten sleeve

# Dump geometry

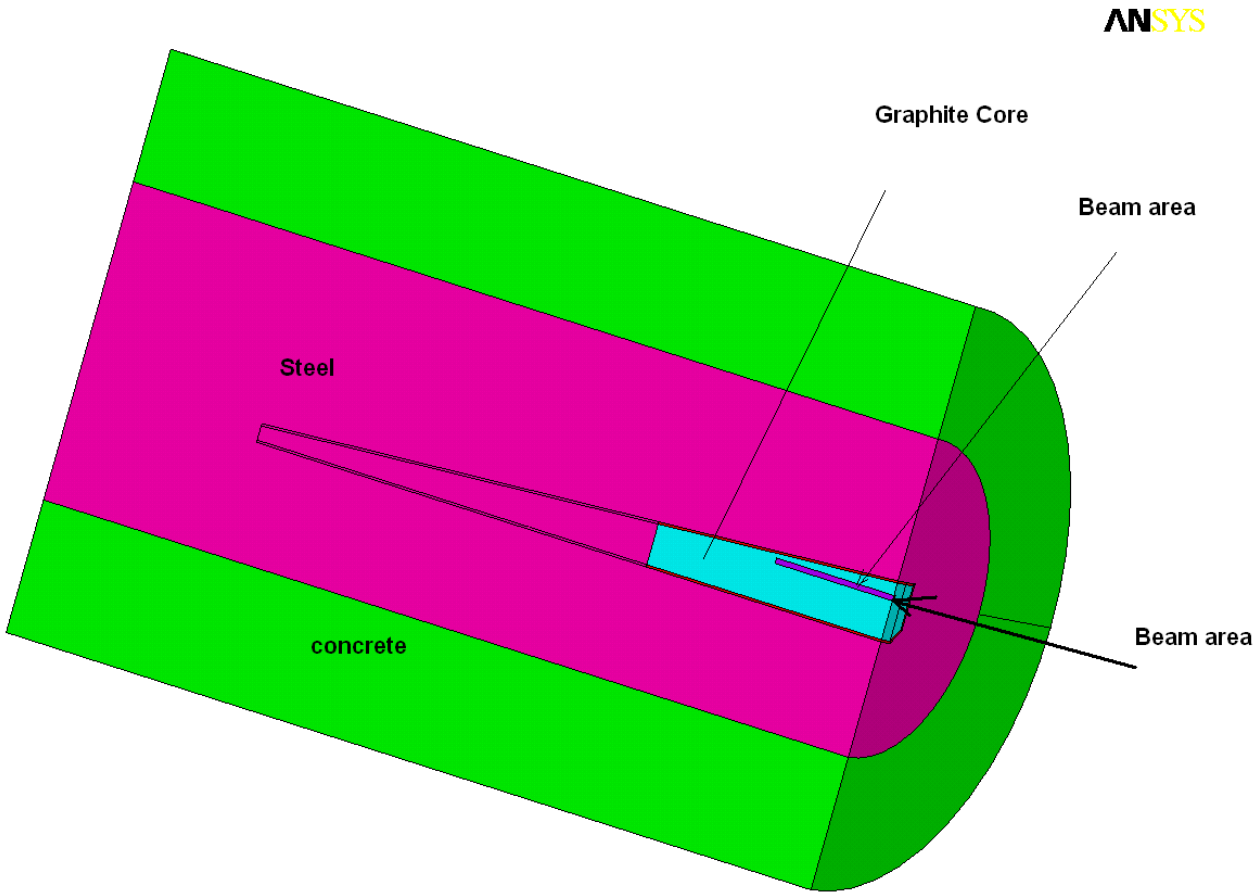

# Dump Core and beam area

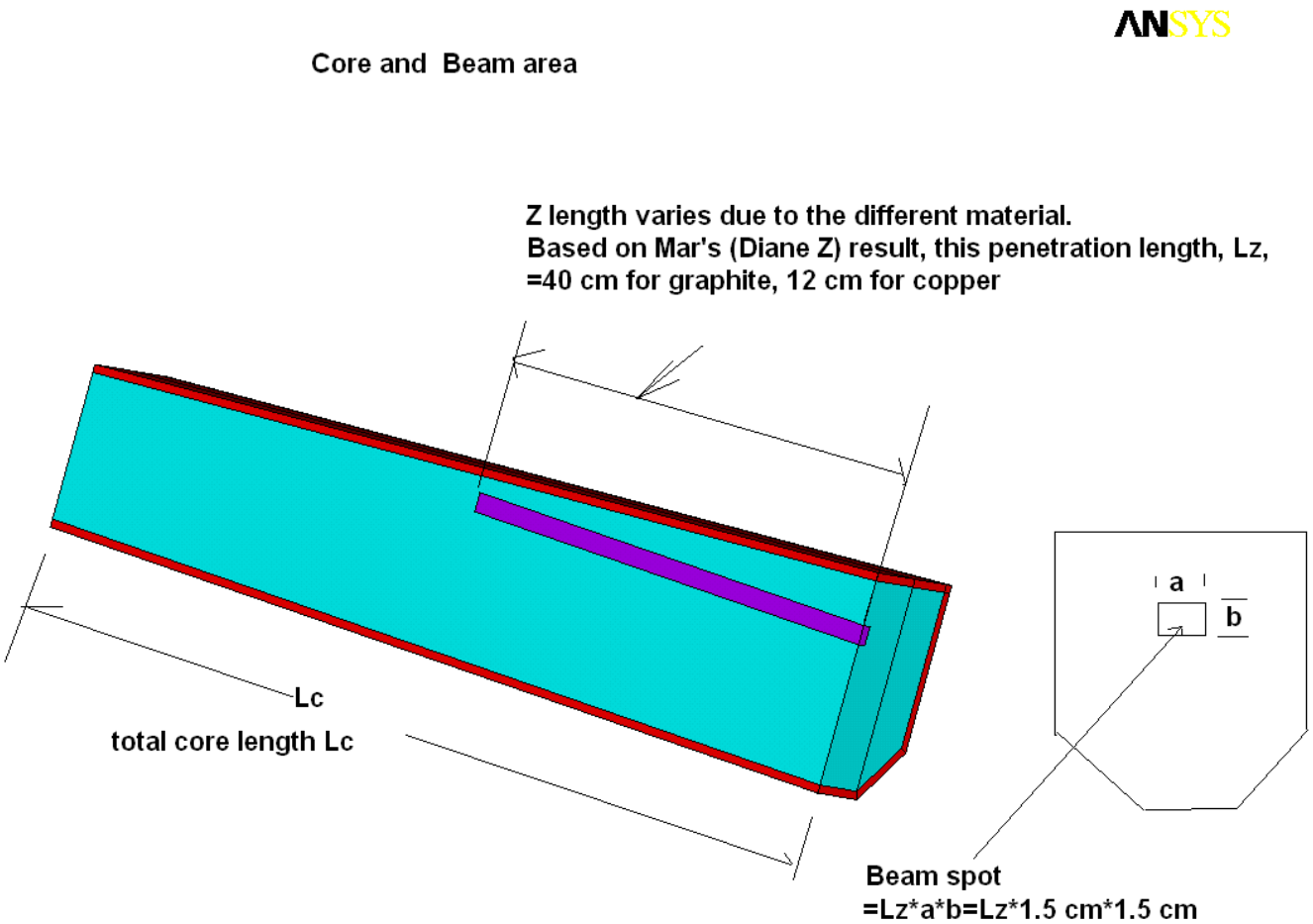

# Loading extracted from Mar's data

| | Steel Upper plate | | | Carbon Plug | | | | | graphite | Steel |
|---|---|---|---|---|---|---|---|---|---|---|
| | Vol (cm3) | E (GeV/g) | dE (GeV/g | Vol (cm3) | E (GeV/g) | dE (GeV/g) | | | E*F | B*C |
| 0 | 0 | 0 | 0 | 3.62E+01 | 8.70E-05 | 3.42E-07 | 2.11E+01 | | 3.15E-03 | 0.00E+00 |
| 1 | 5.65E-02 | 1.32E-07 | 6.60E-08 | 3.61E+01 | 9.25E-05 | 3.84E-07 | 2.24E+01 | | 3.34E-03 | 7.48E-09 |
| 2 | 1.59E+00 | 3.17E-07 | 9.67E-08 | 3.57E+01 | 9.72E-05 | 4.05E-07 | 2.33E+01 | | 3.47E-03 | 5.03E-07 |
| 3 | 1.83E+00 | 8.12E-07 | 1.60E-07 | 3.59E+01 | 9.80E-05 | 4.01E-07 | 2.36E+01 | | 3.52E-03 | 1.49E-06 |
| 4 | 2.00E+00 | 1.25E-06 | 1.81E-07 | 3.57E+01 | 9.91E-05 | 4.06E-07 | 2.37E+01 | | 3.54E-03 | 2.50E-06 |
| 5 | 2.26E+00 | 1.59E-06 | 1.79E-07 | 3.60E+01 | 9.80E-05 | 4.01E-07 | 2.37E+01 | | 3.53E-03 | 3.59E-06 |
| 6 | 2.50E+00 | 2.38E-06 | 2.18E-07 | 3.59E+01 | 9.80E-05 | 3.99E-07 | 2.36E+01 | | 3.52E-03 | 5.95E-06 |
| 7 | 2.62E+00 | 2.60E-06 | 2.15E-07 | 3.55E+01 | 9.89E-05 | 4.12E-07 | 2.36E+01 | | 3.52E-03 | 6.82E-06 |
| 8 | 2.71E+00 | 3.22E-06 | 2.29E-07 | 3.57E+01 | 9.73E-05 | 4.02E-07 | 2.33E+01 | | 3.48E-03 | 8.71E-06 |
| 9 | 2.88E+00 | 3.59E-06 | 2.37E-07 | 3.54E+01 | 9.56E-05 | 3.83E-07 | 2.27E+01 | | 3.39E-03 | 1.03E-05 |
| 10 | 3.00E+00 | 4.20E-06 | 2.51E-07 | 3.60E+01 | 9.36E-05 | 3.90E-07 | 2.26E+01 | | 3.37E-03 | 1.26E-05 |

OP case

| | | | | | | | |
|---|---|---|---|---|---|---|---|
| graphile | 2.325 | gram/cm^3 | | 1.20E+12 | | 1.60E-10 | 15 |
| | graphile | | | pro/pul | | Jole/gev | pulse |
| | den*sum E*F | | | Steel | | | |
| | 3.15E-01 | Gev/proton | | 6.33E-03 | | | |
| | 3.78E+11 | gev/pulse | | 7.60E+09 | | | |
| | 6.06E+01 | Jole/pulse | | 1.22E+00 | | | |
| | 9.09E+02 | jole/sec | | 1.83E+01 | | | |
| | 0.91 | KW | | 0.02 | KW | | |
| | | | | | | | |
| | total= | 0.93 | KW | | | | |
| | | | | | | | |
| | 98.03% | | | 1.97% | | | |

in graphite core

in steel plate

From Mar's:
For OP condition (1.2E12ppp)
The Power=0.91 KW in graphite
and 0.02 KW in steel (less 2%)

For Accident case:
The power is scaled to 7.5E12 ppp
It yields power=6.25 KW

For thermal ans structure calculation:
a) OP will be running for 24 hr/364 day (steady state)

b) The accident will be "OP+1 hr of 6.25 KW"

# Loading summary

1) Operation, 24 hr/365 day

Power=1 kw

2) Accident case:

OP+ 1 hr of 6.25 kw

# Material Property

| | Kxx _watt/m-K | Thermal expansion coeff /K | Syield (ksi) T=500 F | T melting |
|---|---|---|---|---|
| Cu _c10200/sb152 | ~383 | 16.3e-6 | 8 ksi | ~1000C |
| SS _s30400 | 16.7 | 16e-6 | 21 ksi | ~1500 C |
| Graphite | 600 | 3e-6 | Varies, compressive strength ~4,000 psi | > 3000 C |
| Tungsten | 160 | 4.3e-6 | 85ksi | > 3000 C |

# Graphite core +SS sleeve _ OP (1 KW)

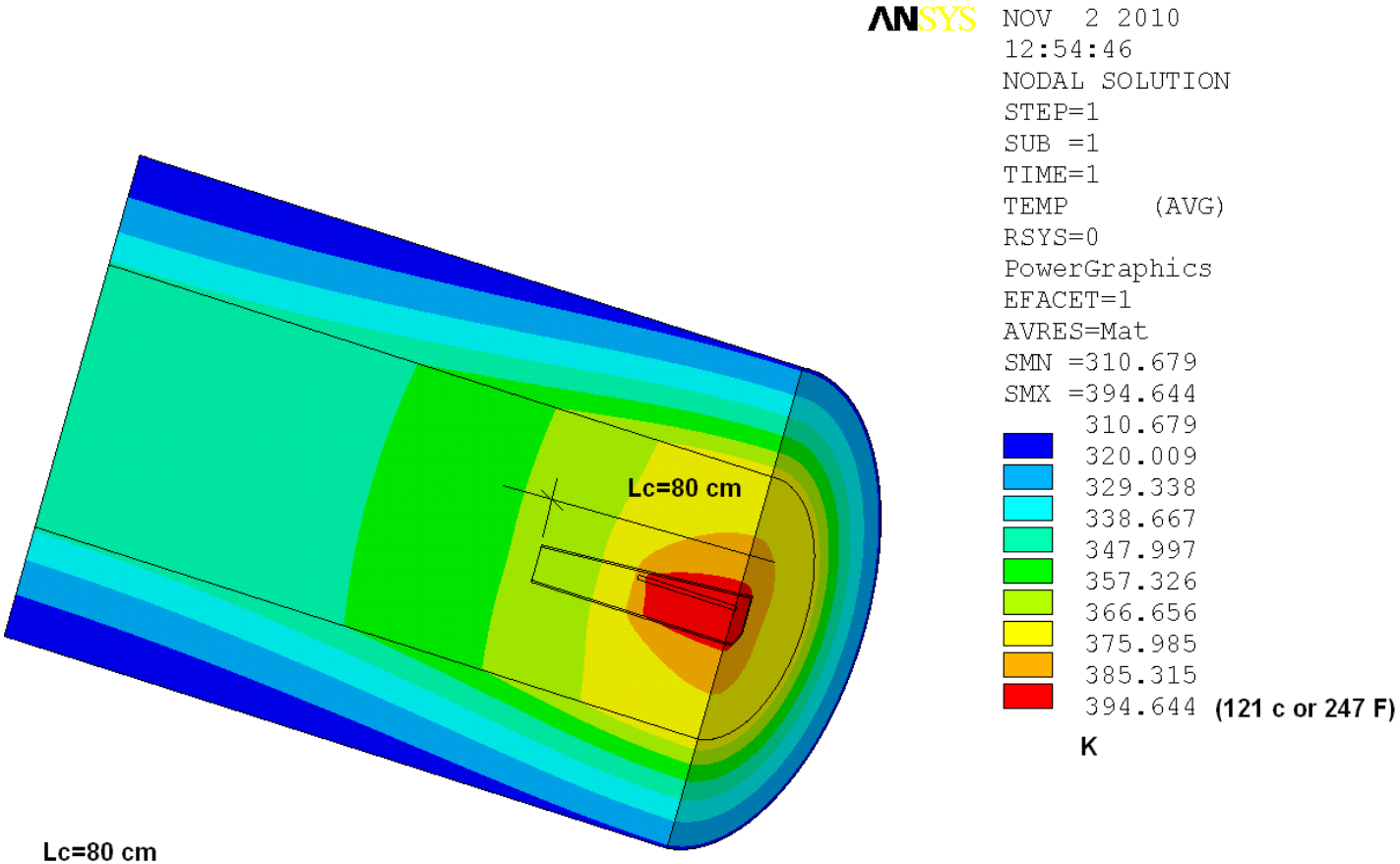


Lc=80 cm
Lz=40 cm

Graphite core + SS sleeve__ for OP of 1 KW case

# Accident Case for Graphite +SS sleeve

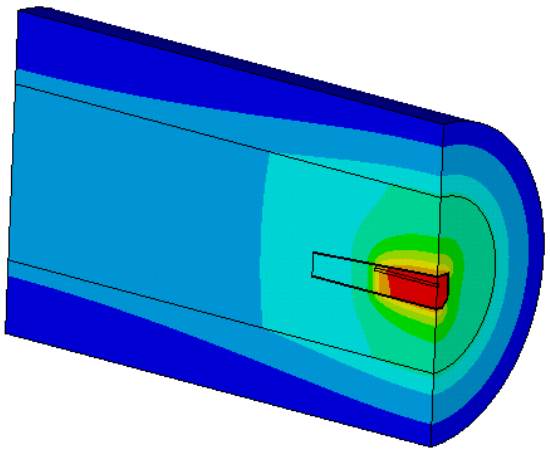

ANSYS 12.1
NOV 8 2010
09:44:09
NODAL SOLUTION
STEP=2
SUB =15
TIME=.260E+07
TEMP (AVG)
RSYS=0
PowerGraphics
EFACET=1
AVRES=Mat
SMN =310.493
SMX =501.438

310.493
331.709
352.926
374.142
395.358
416.574
437.79
459.006
480.222
501.438

**K (228 C or 442 F)**

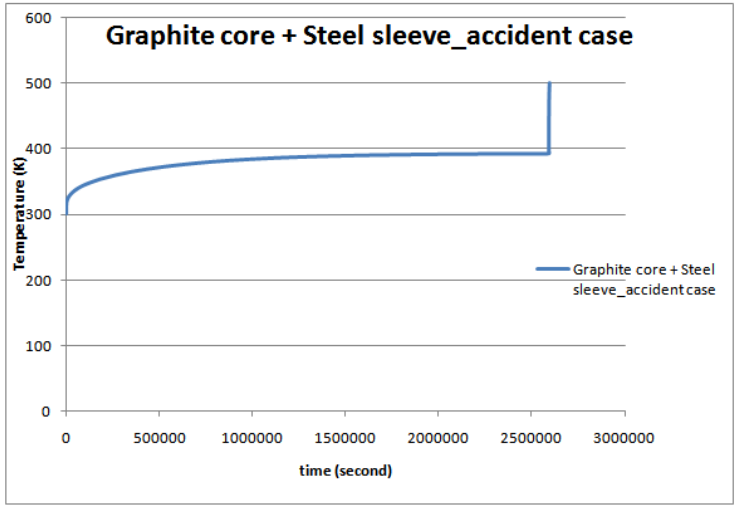


**Accident case**
**OP + 1 hr of 6.25 KW**
**Graphite core + SS sleeve**

# Copper core + SS sleeve

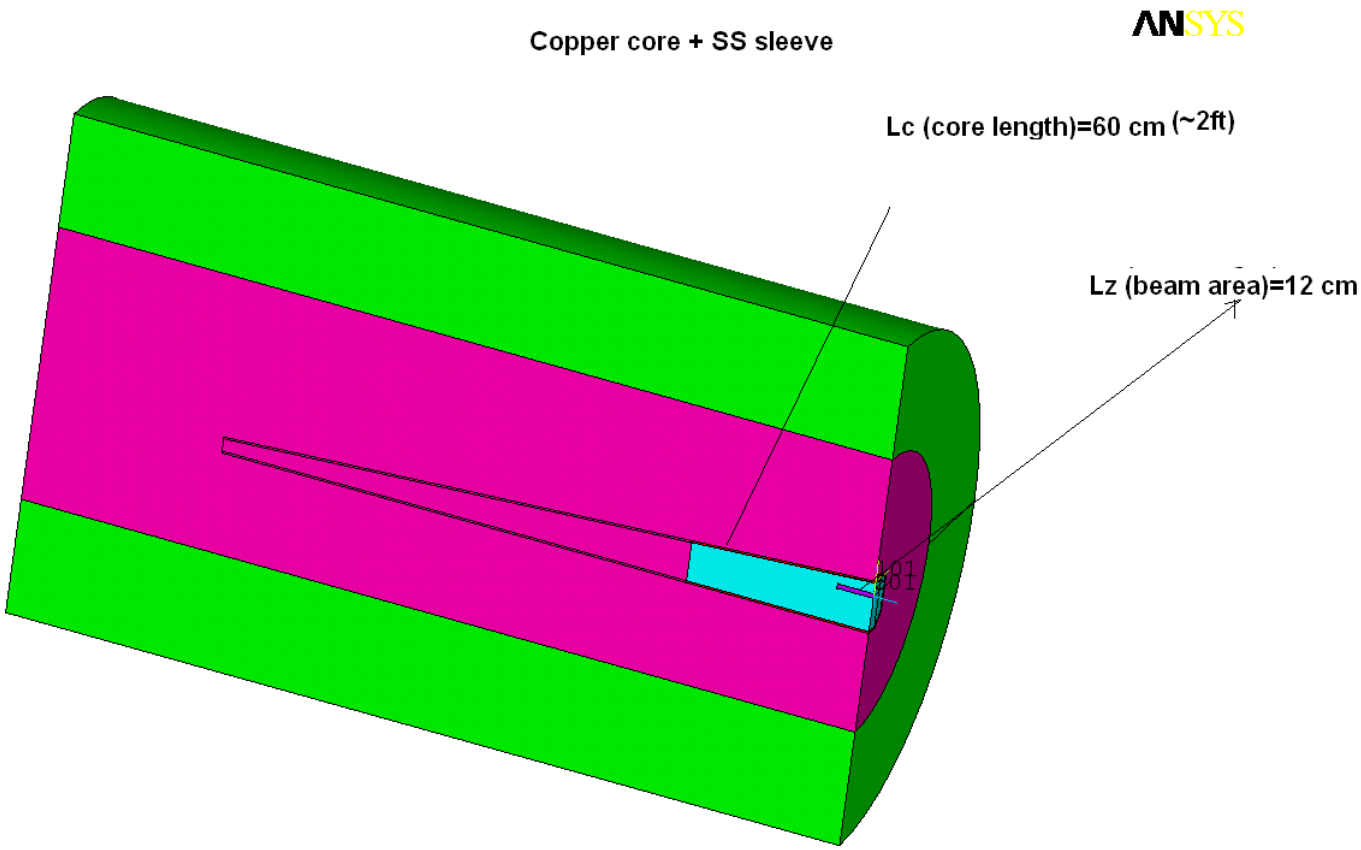

# Temperature for Cu+SS

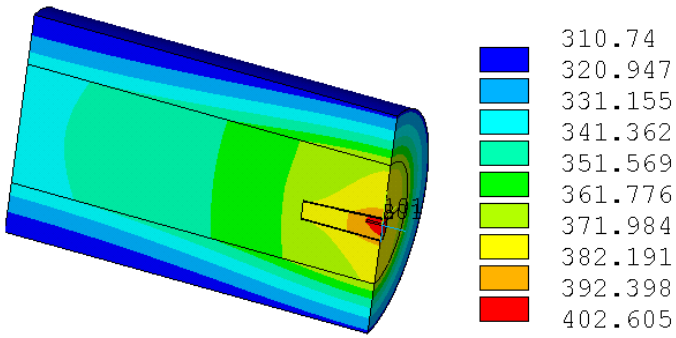


**operation case**
**Cu core +SS sleeve**

**Tmax=402 K=129 C=264 F**

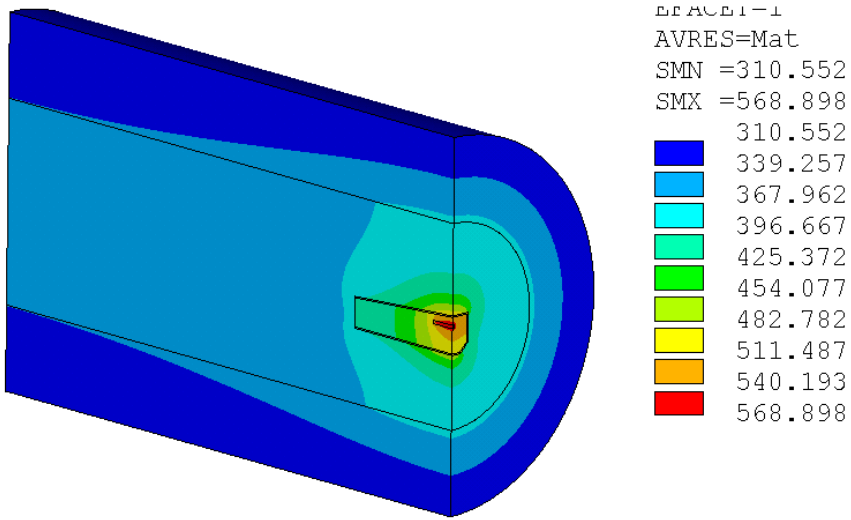


**Accident case**
**OP+1 hr of 6.25 KW**

**Tmax=568 K=295 C = 563 F**

# Tungsten block temperature _OP

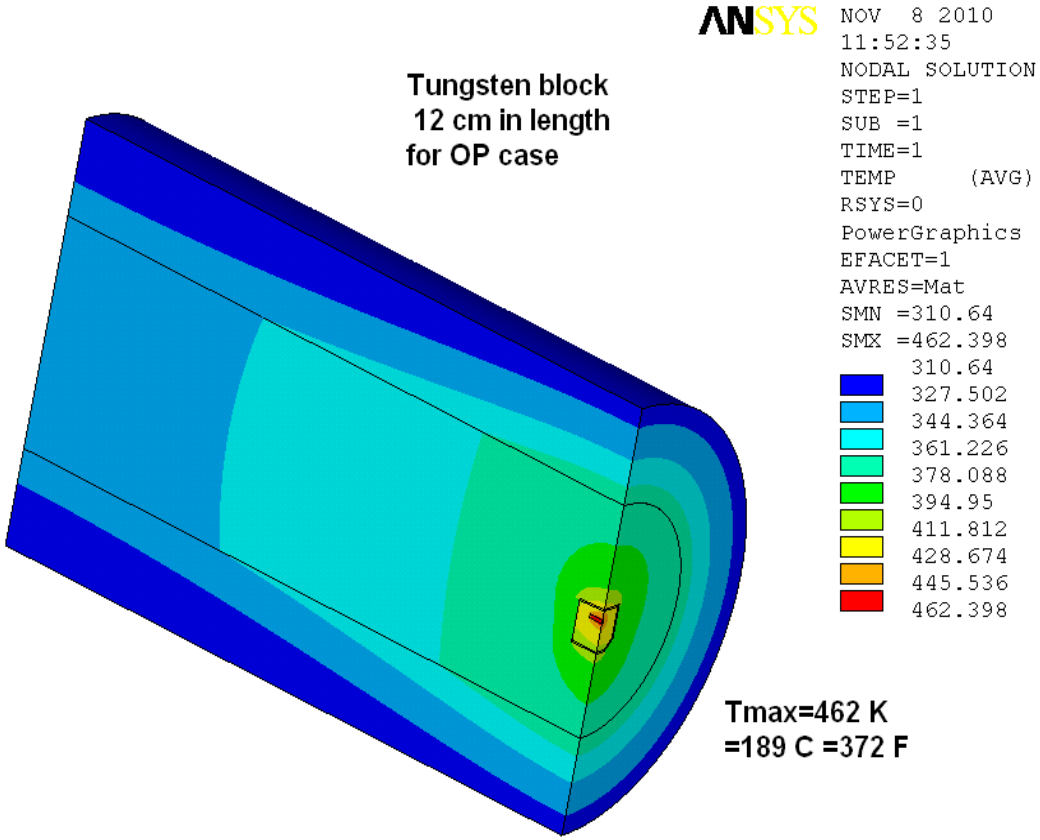


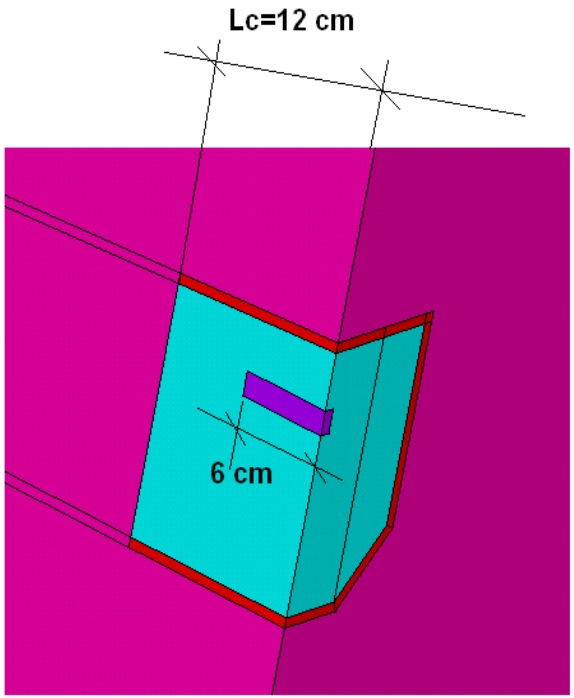

# Tungsten block for OP+ 1 hr of accident

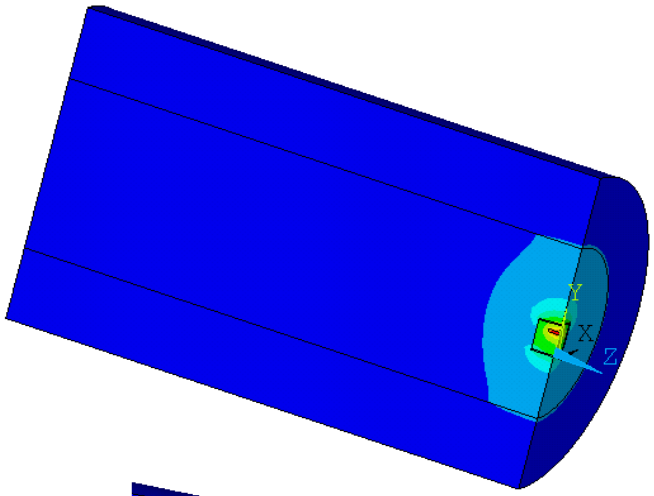


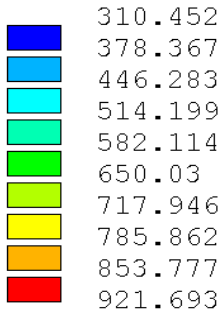


**Tmax=921 K or =638 C**
**or =1198 F**
**For Lc (core length)=12 cm**

**Tungsten block**
**OP ( 1 KW)+1 hr accident of 6.25 KW**

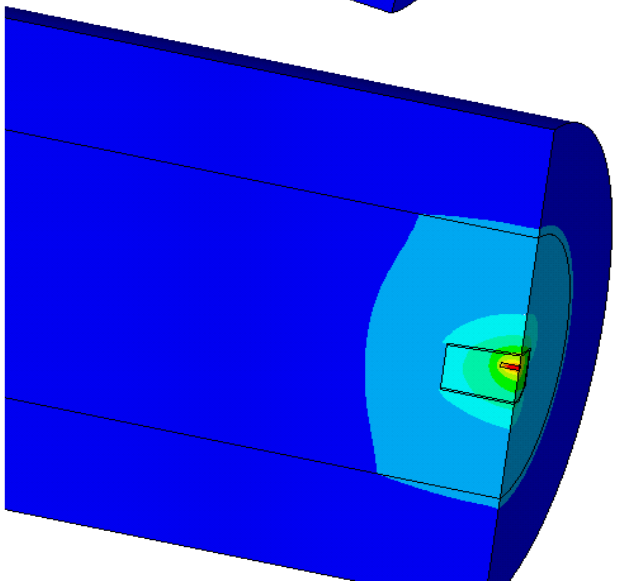

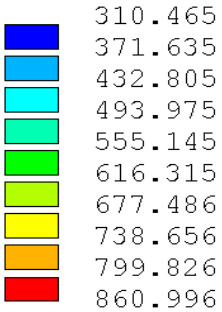


**Tmax=860 K=587 C**
**or =1088 F**

**For Lc (core length)=24 cm**

# Graphite core + tungsten sleeve

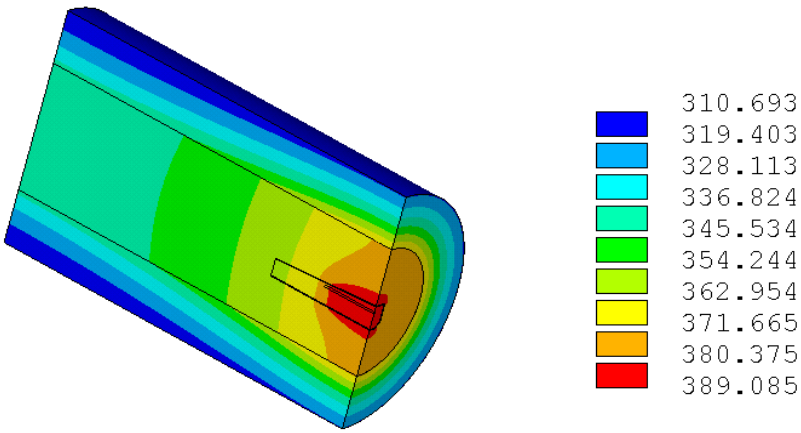


**Tmax=389 k=116C=240 F**

**for OP=1Kw**

**graphite core + Tungsten sleeve case**

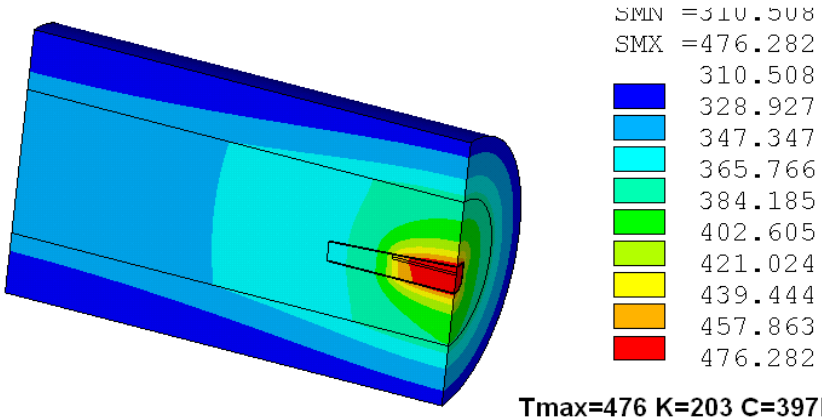


**Tmax=476 K=203 C=397F**
**for OP+1 hr of accident (6.25 KW)**

# Temperature result

| | Lc_ total core length (cm) | Lz=beam section length (cm) from Mar's | Tmax For OP of 1 Kw | Tmax for accident case : op+ 1 hr of 6.25 kw |
|---|---|---|---|---|
| Graphite+SS sleeve | 80 cm | 40 cm | 394 K =121 c =247 F | 501 K=228 C =442 F |
| Cu core + SS sleeve | 60 cm | 12 cm | 402 K =129 C =264 F | 568 K=295 C =563 F |
| Tungsten (core & sleeve) | 12 cm | ~6 cm | 462 K =189 C =372 F | 921 K for Lc=12 cm and 860 K for Lc=24 cm |
| Graphite core + tungsten sleeve | 80 cm | 40 cm | 389 K =116C=240 F | 476K =203 C=397F |

# Thermal stress for graphite core + SS OP case

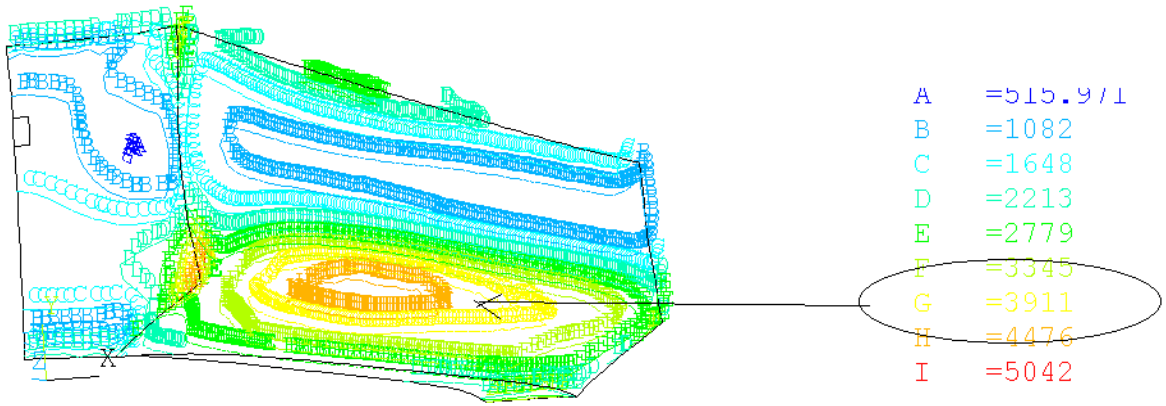


**Thermal stress under OP case (1kw)**

**Graphite core**
**Smax=~4000 psi**

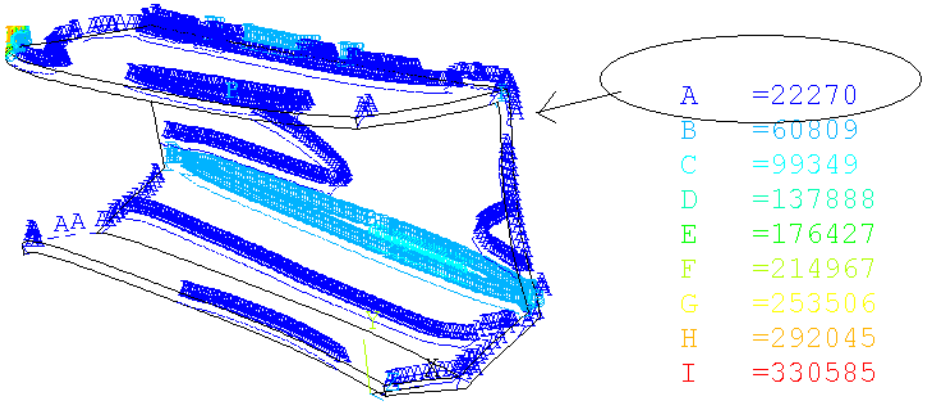


**SS sleeve**
**Smax=22.2 ksi**

**some area is higher, but very localized**

# Thermal stress for Graphite core + SS sleeve accident case

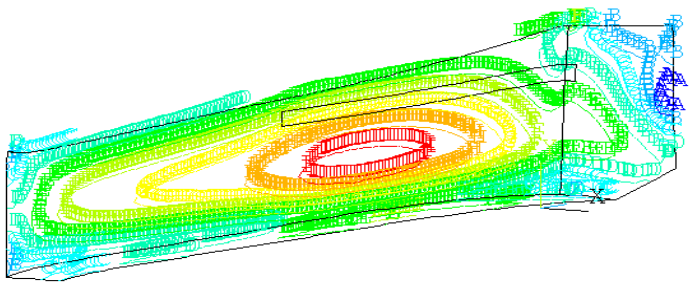

OP (1Kw)+ 1 hr of 6.25 kw case

A =554.003
B =1129
C =1705
D =2280
E =2856
F =3431
G =4007
H =4582
I =5158

Graphite core
Smax=~5000 psi

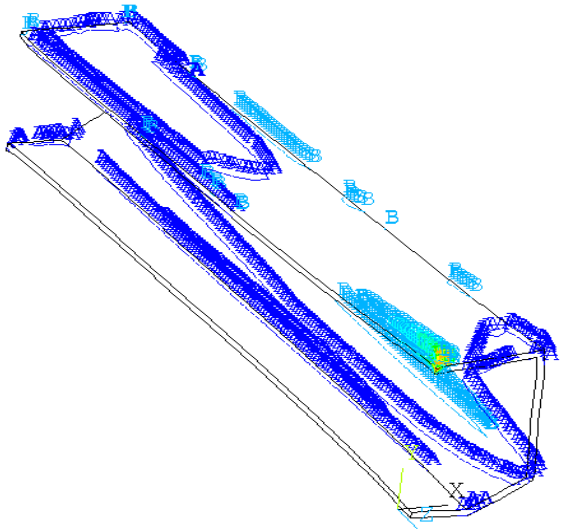

A =35226
B =104297
C =173368
D =242439
E =311510
F =380582
G =449653
H =518724
I =587795

SS sleeve
Smax=> 35 ksi too high

# Thermal stress for Cu+SS (operating case: 1 kw )

**Cu+SS _ OP case (1KW)**

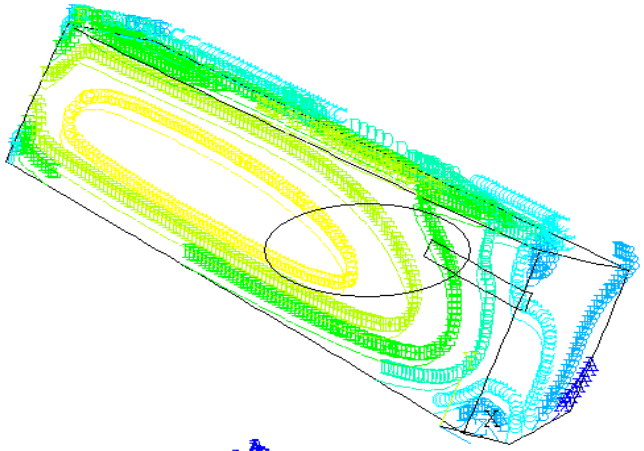

A =8693
B =14576
C =20458
D =26341
E =32224
F =38106
G =43989
H =49871
I =55754

**Cu core**
**Smax=~40 ksi**
**too high**

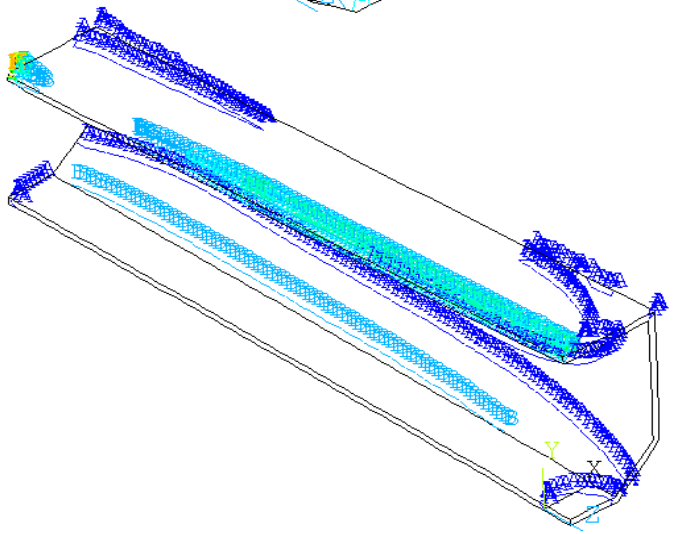

A =23829
B =69529
C =115229
D =160929
E =206629
F =252329
G =298029
H =343729
I =389429

**SS sleeve**
**Smax>24 ksi**

# Thermal stress for Cu+SS Accident case

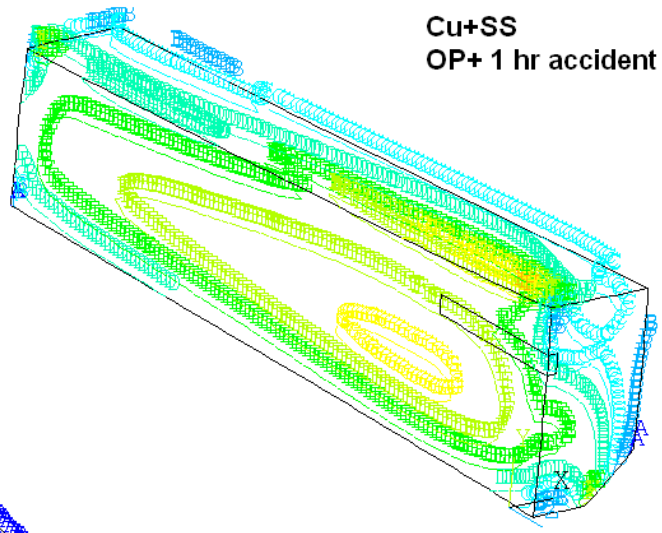

**Cu+SS**
**OP+ 1 hr accident case**

**Cu+ss Accident**
**Cu core**
**Smax=~60 ksi**
**too high**

A =14290
B =23027
C =31765
D =40502
E =49240
F =57977
G =66714
H =75452
I =84189

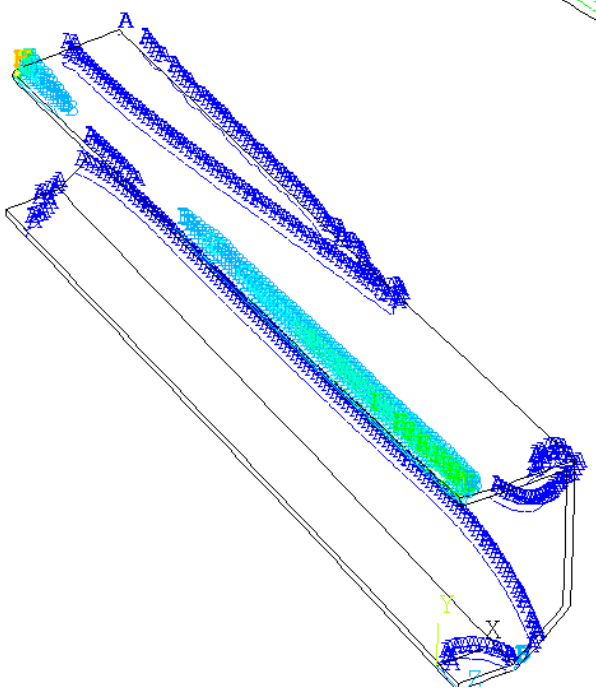

**SS sleeve**
**Smax> 44 ksi too high**

A =43636
B =127616
C =211596
D =295577
E =379557
F =463537
G =547517
H =631497
I =715477

# Thermal stress for tungsten block

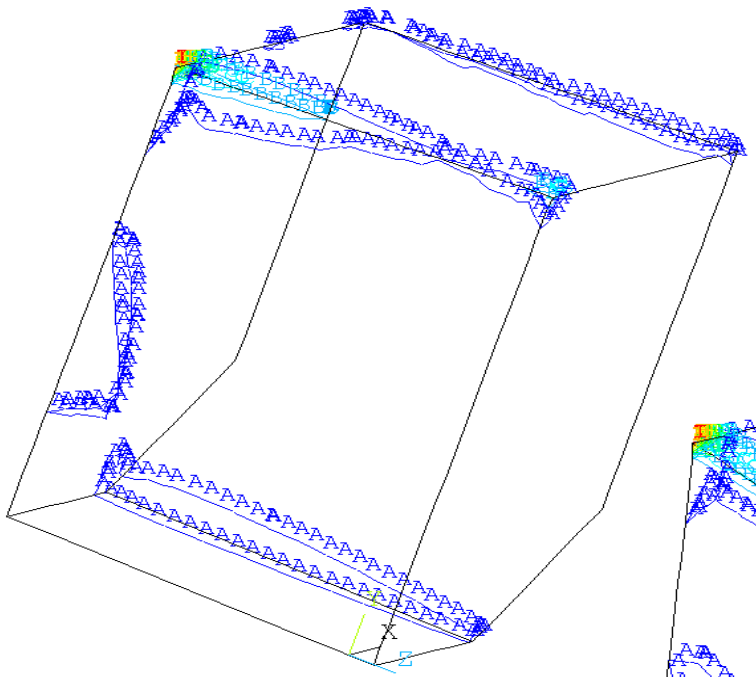

A =38681
B =115789
C =192897
D =270006
E =347114
F =424222
G =501331
H =578439
I =655547

**Tungsten block for OP:**
**Smax=38 ksi (ok)**

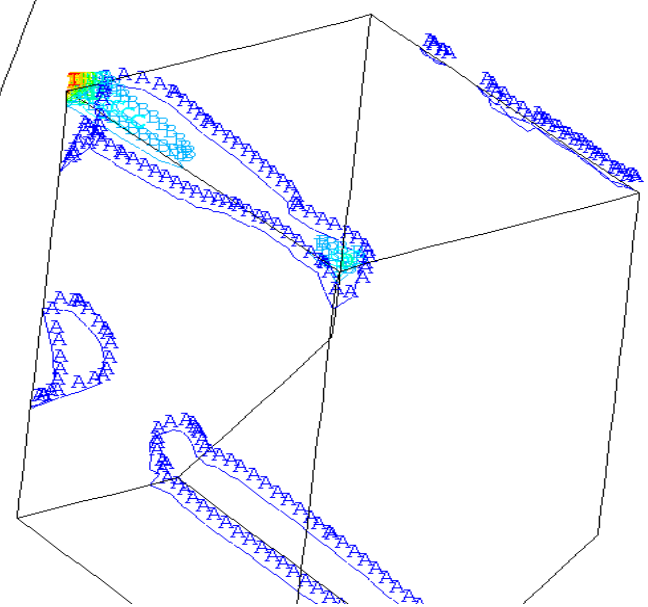

**for op+1 hr of 6.25 kw**
**Smax=85 ksi for Lc=12 cm**
**and 84 ksi for Lc=24 cm**

A =85330
B =254935
C =424540
D =594145
E =763750
F =933355
G =.110E+07
H =.127E+07
I =.144E+07

# Thermal stress for graphite core + Tungsten sleeve_ for OP case

**graphite Core + Tungsten Sleeve**

**Thermal stress for operating case (1KW)**

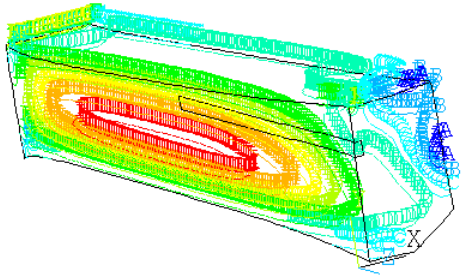

A =347.412
B =766.626
C =1186
D =1605
E =2024
F =2443
G =2863
H =3282
I =3701

**Smax=3700 psi**
**for grahite core**

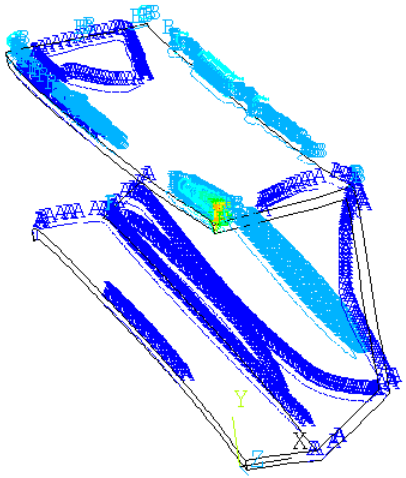

A =22375
B =66271
C =110167
D =154063
E =197958
F =241854
G =285750
H =329646
I =373542

**Smax=22 ksi**
**and 60 ksi some local area**

# Thermal stress for graphite core + tungsten sleeve Op+ 1 hr of 6.25 KW accident case

**Thermal stress for OP+1 hr of 6.25 kw graphite core +tungsten sleeve**

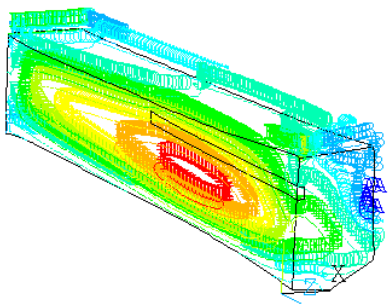

A =530.428
B =1080
C =1630
D =2179
E =2729
F =3278
G =3828
H =4377
I =4927

**Smax=4900 psi for graphite core**

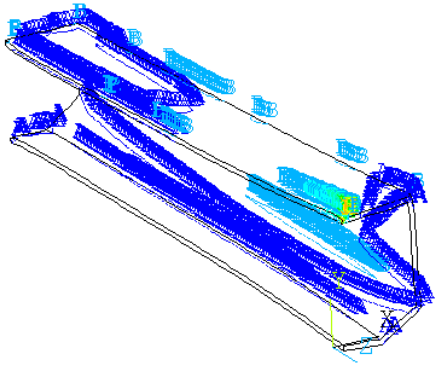

A =34726
B =103319
C =171912
D =240504
E =309097
F =377690
G =446283
H =514876
I =583469

**Smax=35 ksi for tungsten sleeve, some local area=100 ksi**

# Thermal stress

| | Graphite/SS | Cu/SS | Tungsten | Graphite /Tungsten |
|---|---|---|---|---|
| OP (1 kw) stress ksi | 4 ksi/24 ksi | 40 ksi/24 ksi | 38 ksi (ok) | 3.7 ksi/22 ksi |
| Accident (1kw+ 1 hr of 6.25 kw)_stress ksi | 5 ksi/35 ksi | 60/44 ksi | 85 ksi (ok) | 4.9 ksi/35 ksi |

Yield stress for Cu=8 ksi,
SS=21 ksi,
Grahite around 4~5 ksi in compressive,
W=85 ksi

# Conclusion

- Both tungsten block and graphite _core +tungsten sleeve will work.
- Tungsten block is simplest and Lc=24 cm is recommended.
- Tungsten +graphite core offers a least temperature rise due to the graphite core has a small dE/dz→ longer Lz ( 40 cm , rather than 6 cm if it is tungsten core.