REV.	DESCRIPTION	DRAWN	DATE
		APPD.	DATE

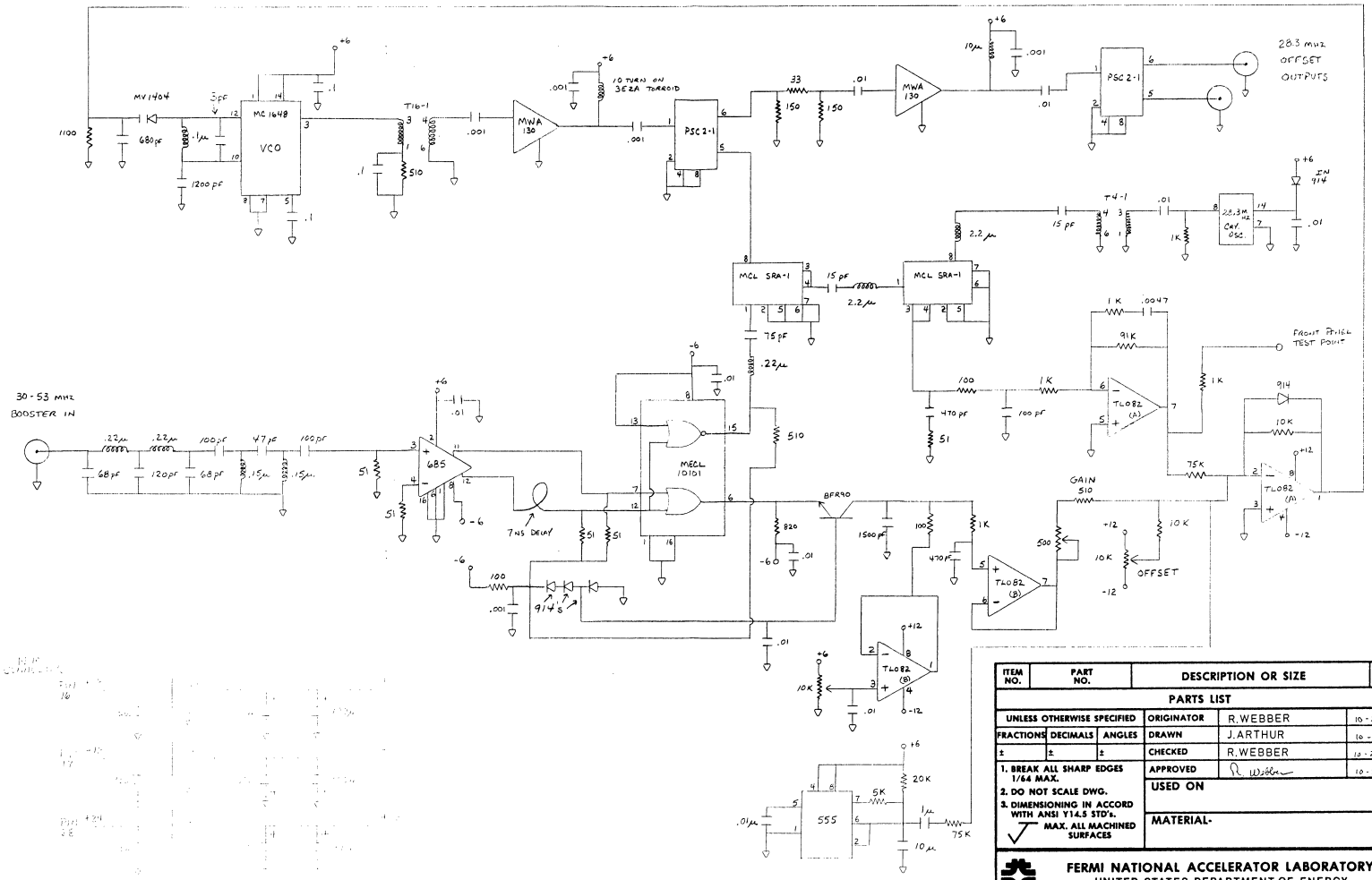

ITEM NO.	PART NO.	DESCRIPTION OR SIZE	QTY. REQ.

PARTS LIST

UNLESS OTHERWISE SPECIFIED			ORIGINATOR	R.WEBBER	10-25-85
FRACTIONS	DECIMALS	ANGLES	DRAWN	J.ARTHUR	10-25-85
±	±	±	CHECKED	R.WEBBER	10-25-85
1. BREAK ALL SHARP EDGES 1/64 MAX.			APPROVED	R. Webber	10-25-85
2. DO NOT SCALE DWG.			USED ON		
3. DIMENSIONING IN ACCORD WITH ANSI Y14.5 STD'S.			MATERIAL-		
MAX. ALL MACHINED SURFACES					

FERMI NATIONAL ACCELERATOR LABORATORY
UNITED STATES DEPARTMENT OF ENERGY

BOOSTER LLRF
28.3 MHZ OFFSET FREQUENCY OSCILLATOR

SCALE	FILMED	DRAWING NUMBER	REV.
		0331.00-EC-180686	

BRUNING-40-532