REV.	DESCRIPTION	DRAWN	DATE
		APPD.	DATE

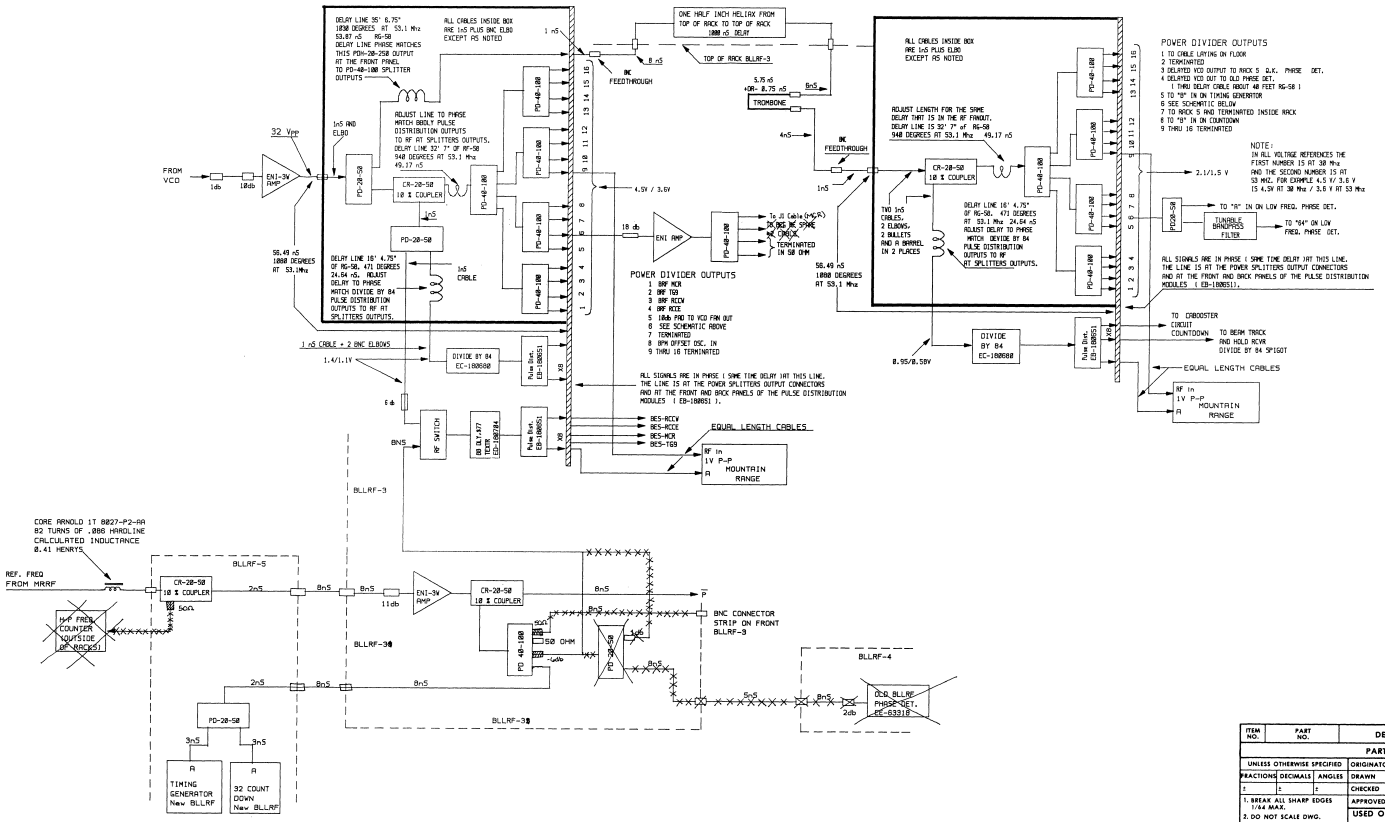

ITEM NO.	PART NO.	DESCRIPTION OR SIZE	QTY. REQ.
		PARTS LIST	

UNLESS OTHERWISE SPECIFIED			ORIGINATOR	MILLER / TANZER	
FRACTIONS	DECIMALS	ANGLES	DRAWN	TANZER	10-14-90
±	±	±	CHECKED		
1. BREAK ALL SHARP EDGES 1/64 MAX.			APPROVED		
2. DO NOT SCALE DWG.			USED ON		
3. DIMENSIONING IN ACCORD WITH ANSI Y14.5 STD's.					
MAX. ALL MACHINED SURFACES			MATERIAL-		

FERMI NATIONAL ACCELERATOR LABORATORY
UNITED STATES DEPARTMENT OF ENERGY

BOOSTER ACCELERATOR RF SYSTEM
LLRF-VCO & DELAYED VCO
DISTRIBUTION

SCALE	FILMED	DRAWING NUMBER	REV.
		0331.00-ED-180190	B