REV.	DESCRIPTION	DRAWN / APPD.	DATE / DATE

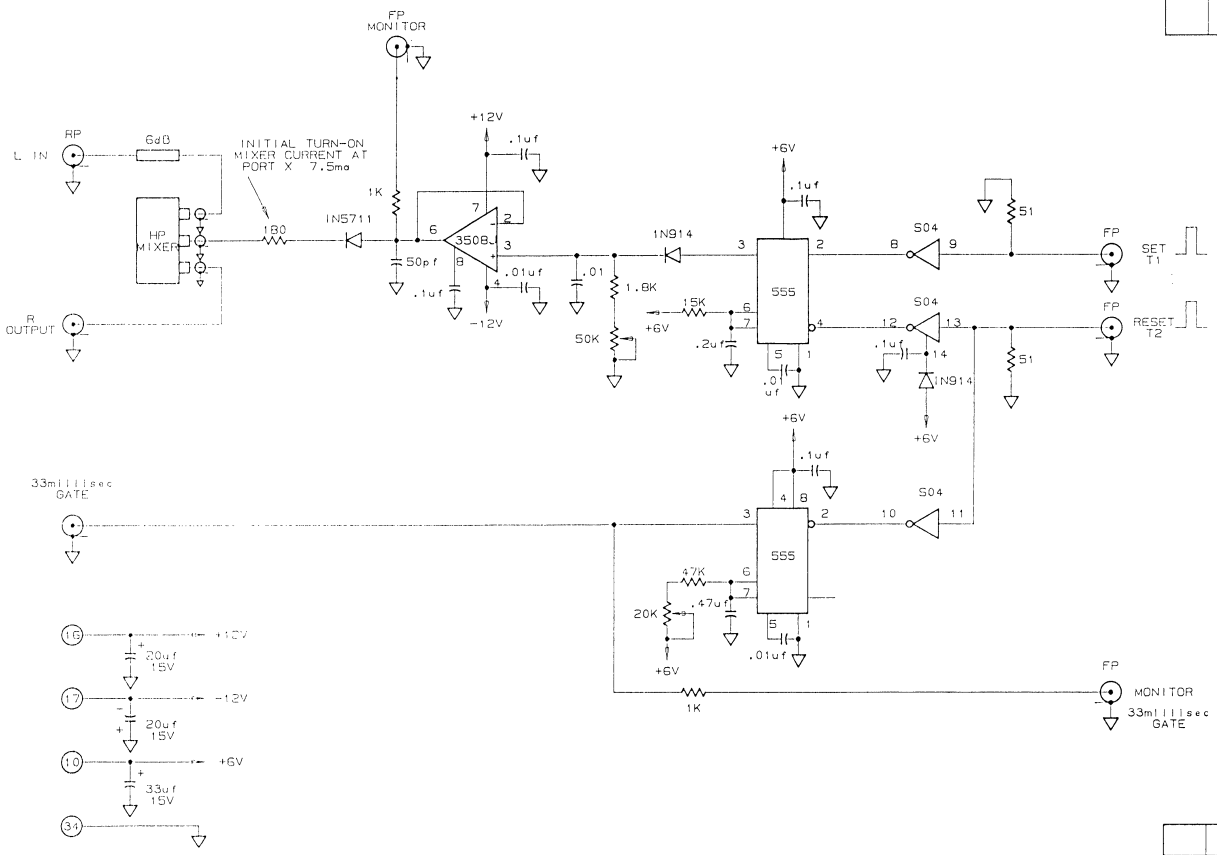

ITEM	PART NO.	DESCRIPTION OR SIZE	QTY.

PARTS LIST

UNLESS OTHERWISE SPECIFIED			ORIGINATOR	C. KERNS	10/16/87
FRACTIONS	DECIMALS	ANGLES	DRAWN	T. SENGMANIVONG	10/16/87
±	±	±	CHECKED		
1. BREAK ALL SHARP EDGES 1/64 MAX.			APPROVED		
2. DO NOT SCALE DRAWING.			USED ON	180841	
3. DIM. TO ANSI Y14.5					
4. MAX. ALL MACH. SURFACES √			MATERIAL		

FERMI NATIONAL ACCELERATOR LABORATORY
UNITED STATES DEPARTMENT OF ENERGY

BOOSTER ACCELERATOR RF. SYSTEM
LLRF - SCITEQ
SYNTHESIZER SWITCH

SCALE	FILMED	DRAWING NUMBER	REV.