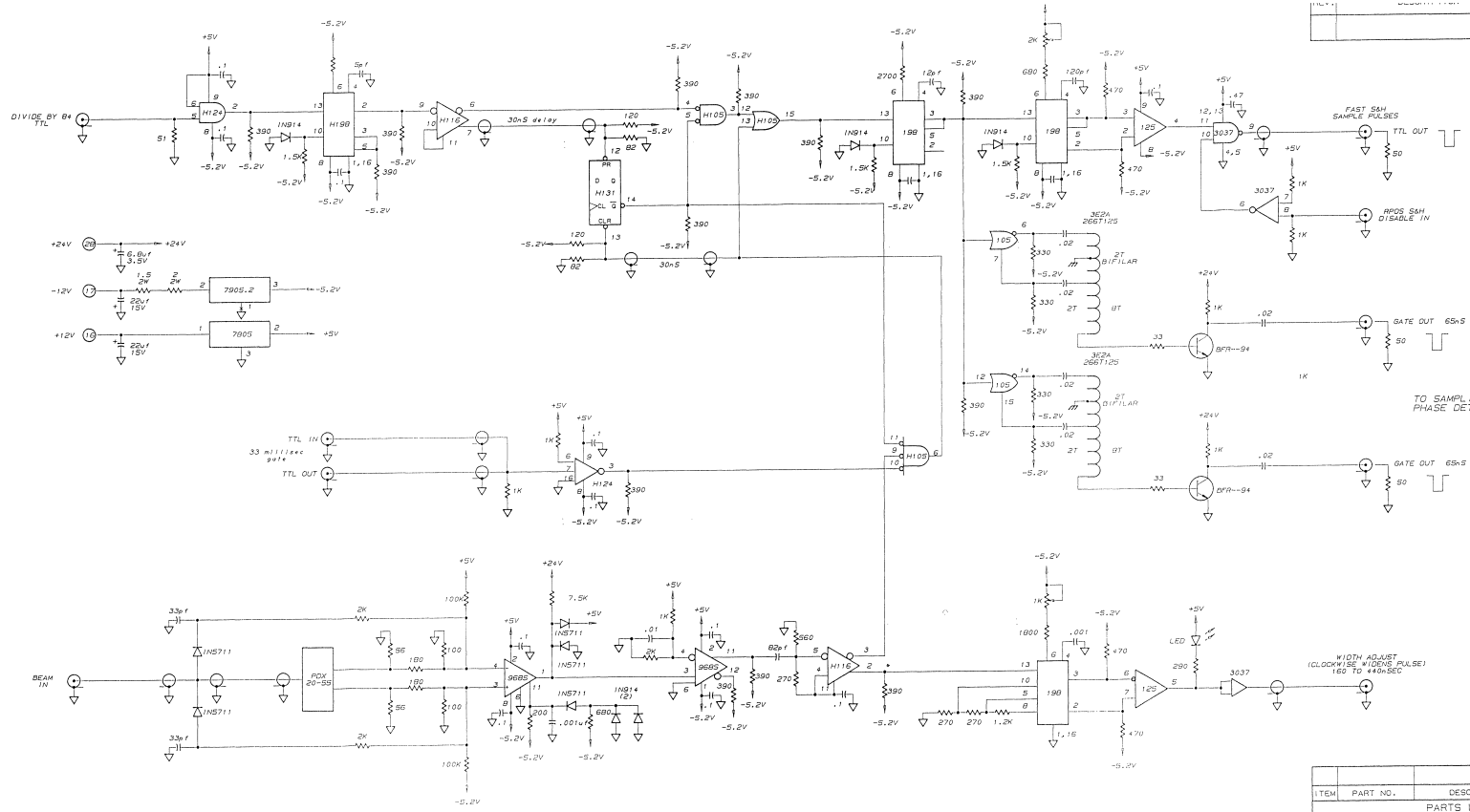

ITEM	PART NO.	DESCRIPTION OR SIZE	QTY.

PARTS LIST

UNLESS OTHERWISE SPECIFIED			ORIGINATOR	C. KERNS	09/24/07
FRACTIONS	DECIMALS	ANGLES	DRAWN	T. SENGMANIVONG	11/04/07
±	±	±	CHECKED		
1. BREAK ALL SHARP EDGES 1/64 MAX.			APPROVED		
2. DO NOT SCALE DRAWING.			USED ON		
3. DIM. TO ANSI Y14.5					
4. MAX. ALL MACH. SURFACES			MATERIAL		

FERMI NATIONAL ACCELERATOR LABORATORY
UNITED STATES DEPARTMENT OF ENERGY

BOOSTER ACCEL. RF. SYSTEM
LLRF-BEAM GAP DETECTOR
GATE GENERATOR

SCALE	FILMED	DRAWING NUMBER	REV.
		0331.00-ED-180842	

CREATED WITH CD/2000 VERSION 1.5 E180841