REV.	DESCRIPTION	DRAWN	DATE
		APPD.	DATE

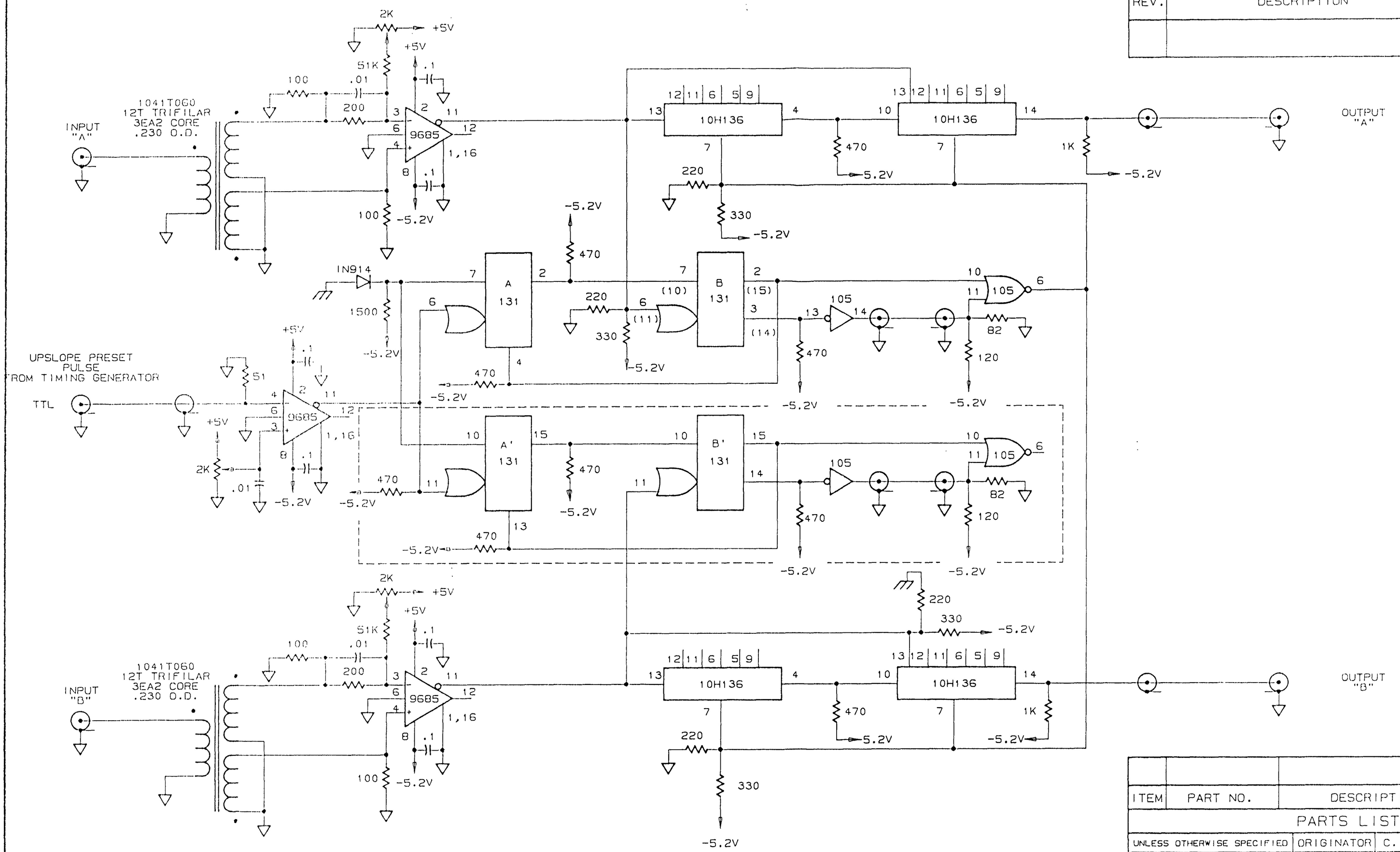

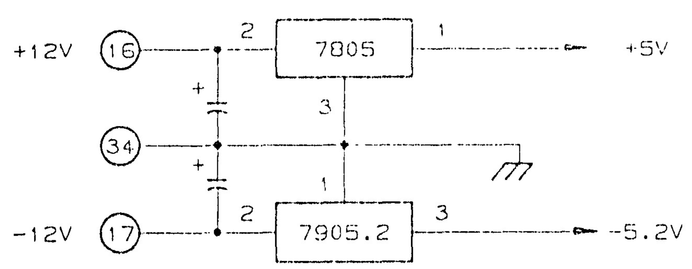

NOTES:

1. CIRCUITS WITHIN DASHED LINE NOT INCLUDED IN MARK II VERSION.
2. NUMBERS IN PARENTHESIS DENOTE PNI NUMBER CHANGES IN MARK II VERSION.

ITEM	PART NO.	DESCRIPTION OR SIZE	QTY.

PARTS LIST

UNLESS OTHERWISE SPECIFIED			ORIGINATOR	C. KERNS	09/24/87
FRACTIONS	DECIMALS	ANGLES	DRAWN	T. SENGMANIVONG	11/16/87
±	±	±	CHECKED		
1. BREAK ALL SHARP EDGES 1/64 MAX.			APPROVED		
2. DO NOT SCALE DRAWING.			USED ON		
3. DIM. TO ANSI Y14.5					
4. MAX. ALL MACH. SURFACES √			MATERIAL		

FERMI NATIONAL ACCELERATOR LABORATORY
UNITED STATES DEPARTMENT OF ENERGY

BOOSTER ACCEL. RF. SYSTEM LLRF-DIVIDE BY 32 COUNTDOWN SCHEMATIC

SCALE	FILMED	DRAWING NUMBER	REV.
		0331.00-EC-180846	

CREATED WITH CD/2000 VERSION 1.5 E180841