REV.	DESCRIPTION	DRAWN	DATE
		APPD.	DATE

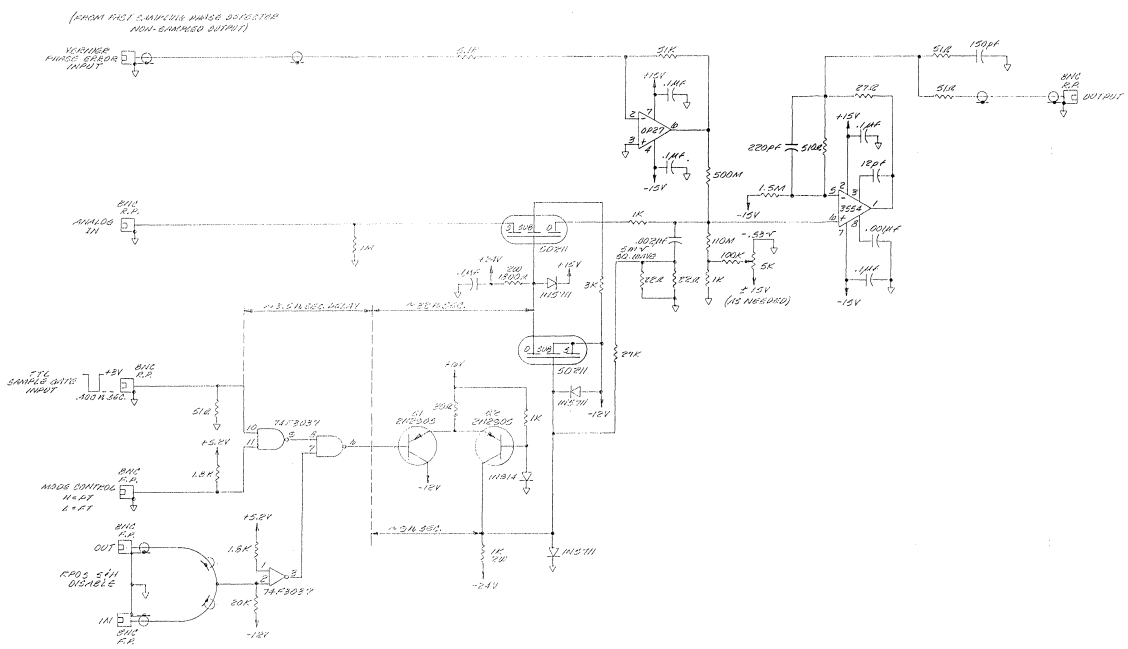

ITEM NO.	PART NO.	DESCRIPTION OR SIZE	QTY. REQ.
		PARTS LIST	

UNLESS OTHERWISE SPECIFIED			ORIGINATOR	C. MORRIS	2-1-85
FRACTIONS	DECIMALS	ANGLES	DRAWN		3-85
±	±	±	CHECKED		
1. BREAK ALL SHARP EDGES 1/64 MAX.			APPROVED		
2. DO NOT SCALE DWG.			USED ON		
3. DIMENSIONING IN ACCORD WITH ANSI Y14.5 STD's.			MATERIAL-		
√ MAX. ALL MACHINED SURFACES					

FERMI NATIONAL ACCELERATOR LABORATORY
UNITED STATES DEPARTMENT OF ENERGY

BOOSTER ACCELERATOR RF SYSTEM
PHASING TURN 2 LEF
FAST SAMPLE & HOLD #1
SCHEMATIC

SCALE	FILMED	DRAWING NUMBER	REV.
		0331.00-ED-180851	

BRUNING 40-127