REV.	DESCRIPTION	DRAWN	DATE
		APPD.	DATE

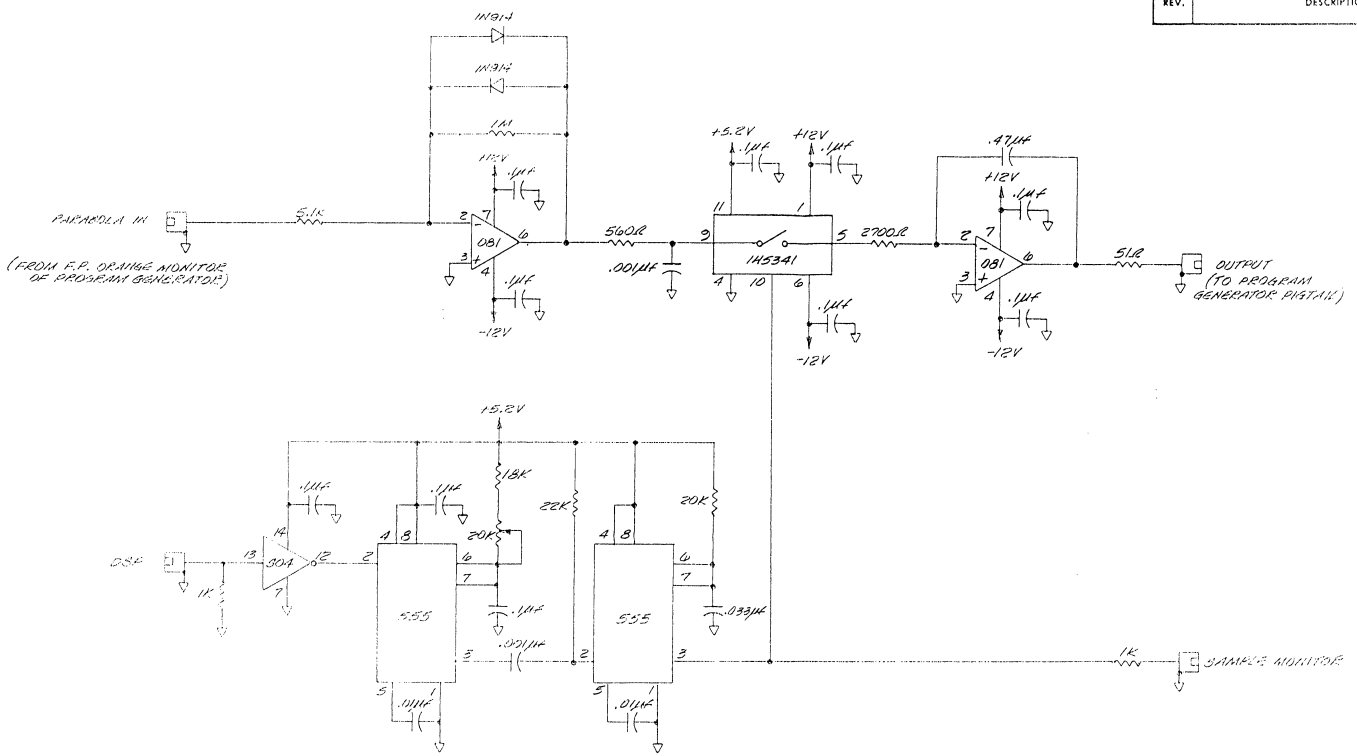

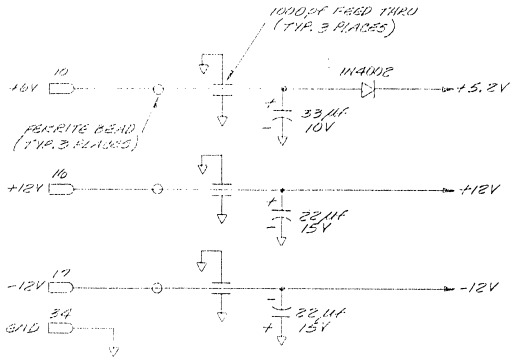

ITEM NO.	PART NO.	DESCRIPTION OR SIZE	QTY. REQ.
PARTS LIST			

UNLESS OTHERWISE SPECIFIED			ORIGINATOR	C. KERNS	2-3-88
FRACTIONS	DECIMALS	ANGLES	DRAWN	[illegible]	3-88
±	±	±	CHECKED	[illegible]	3-17-88
1. BREAK ALL SHARP EDGES 1/64 MAX.			APPROVED		
2. DO NOT SCALE DWG.			USED ON		
3. DIMENSIONING IN ACCORD WITH ANSI Y14.5 STD's.					
√ MAX. ALL MACHINED SURFACES			MATERIAL-		

FERMI NATIONAL ACCELERATOR LABORATORY
UNITED STATES DEPARTMENT OF ENERGY

BOOSTER ACCELERATOR RF SYSTEM
PARTIAL TURN LLRF
PARABOLA ZERO BOX
SCHEMATIC

SCALE	FILMED	DRAWING NUMBER	REV.
	F 9/88	0331.00-EC-180858	