REV.	DESCRIPTION	DRAWN	DATE
		APPD.	DATE

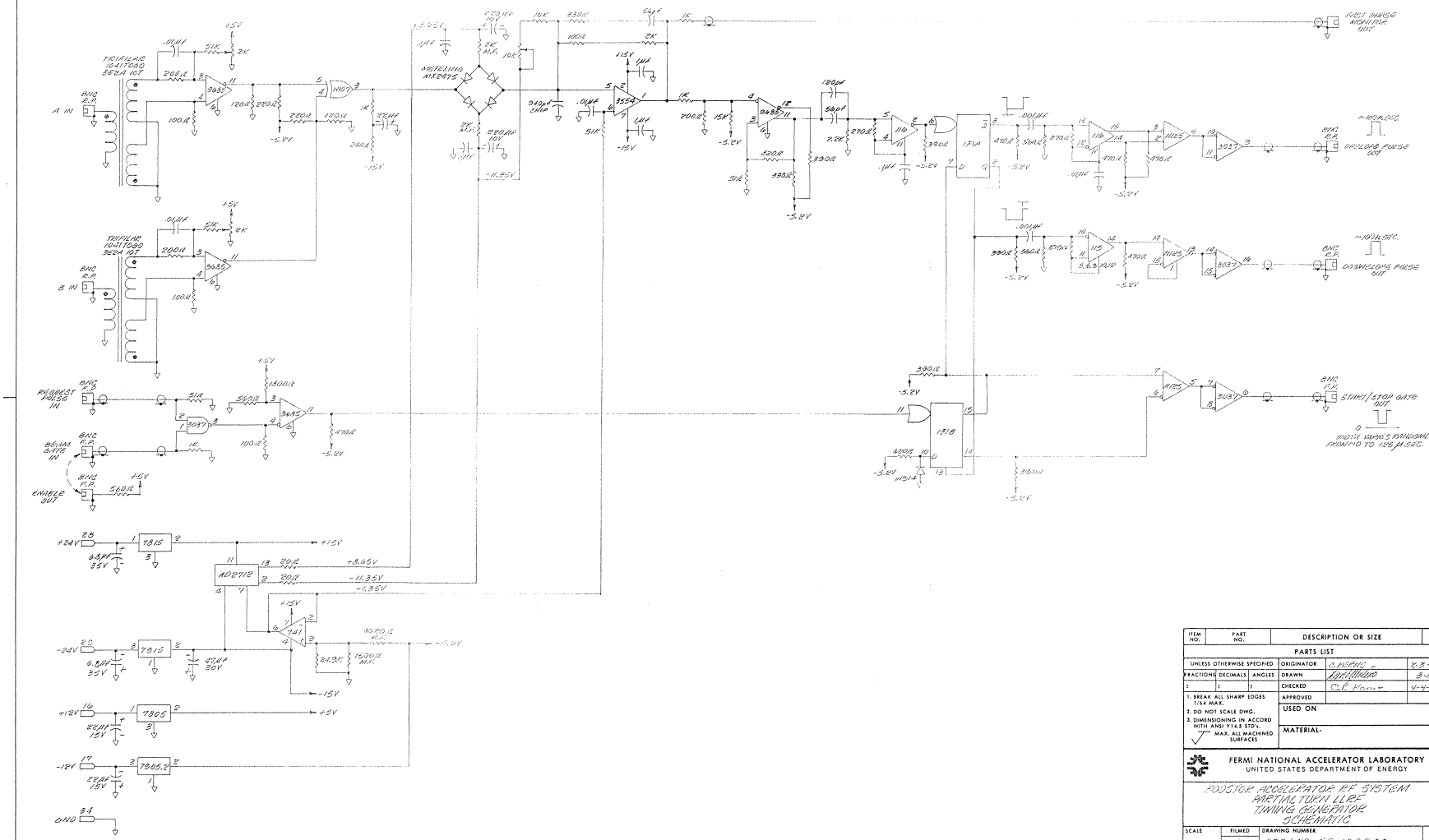

ITEM NO.	PART NO.	DESCRIPTION OR SIZE	QTY. REQ.

PARTS LIST

UNLESS OTHERWISE SPECIFIED			ORIGINATOR		2-3-88
FRACTIONS	DECIMALS	ANGLES	DRAWN		3-88
±	±	±	CHECKED	C.R. Kerr	4-4-88

1. BREAK ALL SHARP EDGES 1/64 MAX.
2. DO NOT SCALE DWG.
3. DIMENSIONING IN ACCORD WITH ANSI Y14.5 STD'S.

√ MAX. ALL MACHINED SURFACES

APPROVED

USED ON

MATERIAL-

FERMI NATIONAL ACCELERATOR LABORATORY
UNITED STATES DEPARTMENT OF ENERGY

BOOSTER ACCELERATOR RF SYSTEM
PARTIAL TURN LLRF
TIMING GENERATOR
SCHEMATIC

SCALE	FILMED	DRAWING NUMBER	REV.
	F/24	0831.00-ED-130859	

DRUNING 40-107