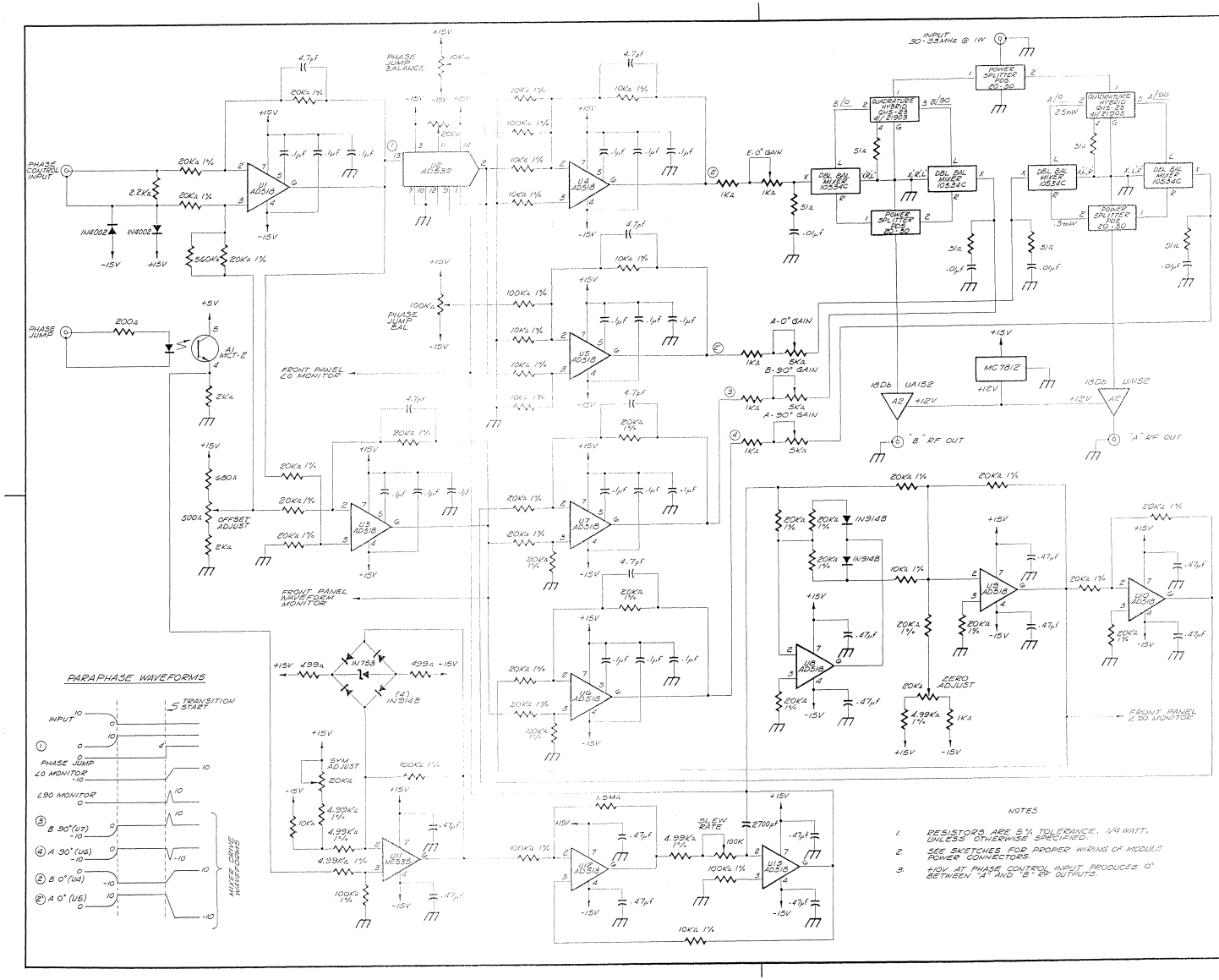

REV.	DESCRIPTION	DRAWN / APPD.	DATE / DATE
A	REVISED AND REDRAWN	R. GORGE / K. Meisner	1-7-80

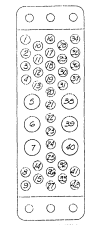

REAR VIEW

A-MP CONNECTOR 202515-3

PIN	FUNCTION	COLOR
18	+5V	
26	+15V	
27	-15V	
28	+24V	
34	COMMON	

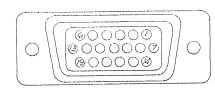

REAR VIEW

ITT CANNON D SUBMINATE CNN #20E-19P

PIN	FUNCTION	COLOR
2	-15V	
7	+5V	
8	COMMON	
9	COMMON	
10	COMMON	
14	+24V	
18	+15V	

NOTES

1. RESISTORS ARE 5% TOLERANCE, 1/4 WATT, UNLESS OTHERWISE SPECIFIED.
2. SEE SKETCHES FOR PROPER WIRING OF MODULE POWER CONNECTORS.
3. +10V AT PHASE CONTROL INPUT PRODUCES 0° BETWEEN "A" AND "B" RF OUTPUTS.

ITEM NO.	PART NO.	DESCRIPTION OR SIZE	QTY. REQ.

PARTS LIST

UNLESS OTHERWISE SPECIFIED			ORIGINATOR	K. MEISNER	1-7-80
FRACTIONS	DECIMALS	ANGLES	DRAWN	R. GORGE	1-7-80
± -//-	± -//-	± -//-	CHECKED	K. Meisner	
			APPROVED		

1. BREAK ALL SHARP EDGES 1/64 MAX.
2. DO NOT SCALE DWG.
3. DIMENSIONING IN ACCORD WITH ANSI Y14.5 STD'S.

MAX. ALL MACHINED SURFACES

USED ON

MATERIAL-

FERMI NATIONAL ACCELERATOR LABORATORY
UNITED STATES DEPARTMENT OF ENERGY

BOOSTER RF SYSTEMS
PARAPHASE TURN-ON MODULE
SCHEMATIC DIAGRAM

SCALE	FILMED	DRAWING NUMBER	REV.
-//-	5/13/80	0332.00-ED-62829	A