REV.	DESCRIPTION	DRAWN / APPD.	DATE / DATE
A	REVISED FOR MARKED PRINT.	[illegible] / R. Hinch	3/80 / 3/80

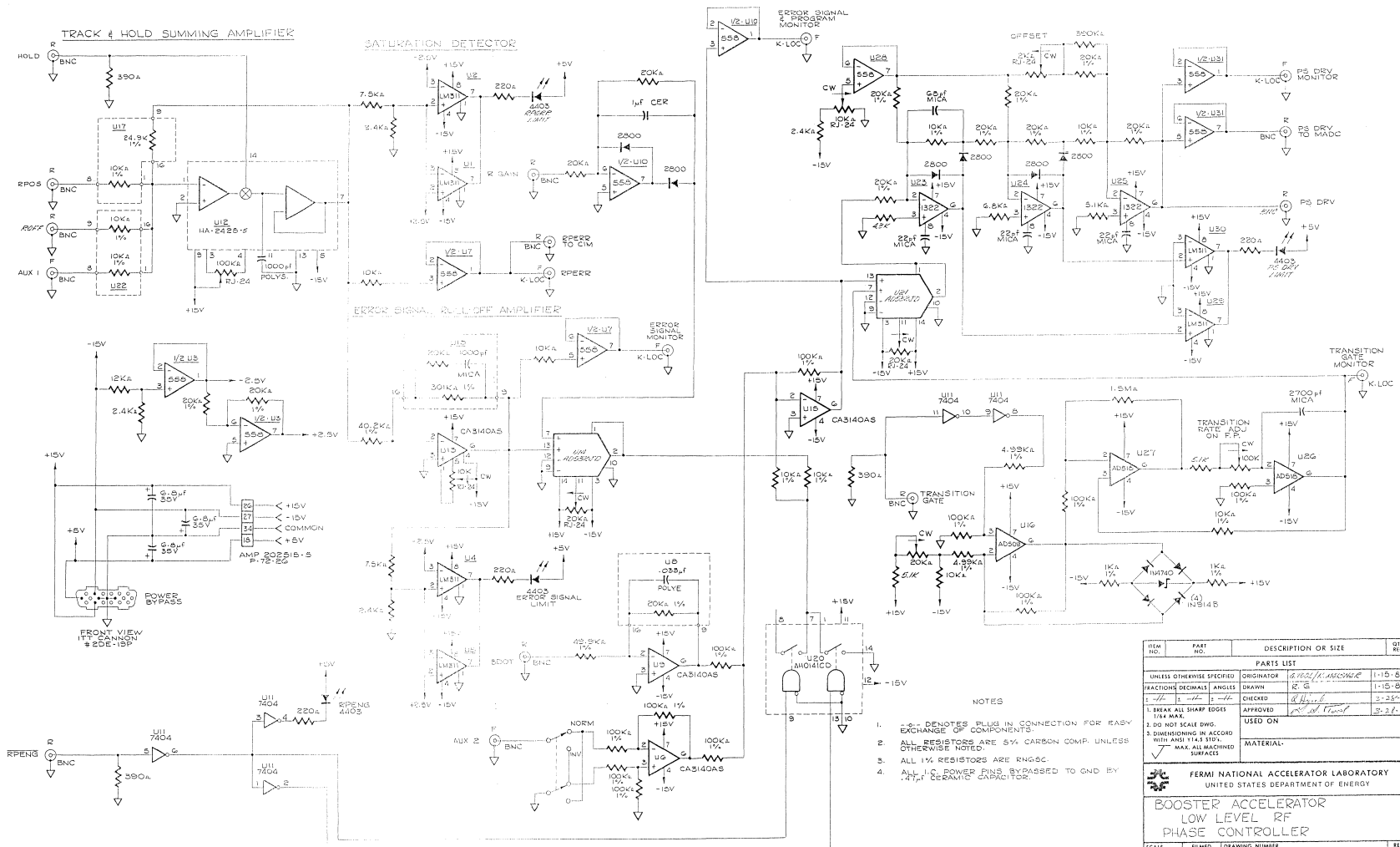

NOTES

1. -o- DENOTES PLUG IN CONNECTION FOR EASY EXCHANGE OF COMPONENTS.
2. ALL RESISTORS ARE 5% CARBON COMP. UNLESS OTHERWISE NOTED.
3. ALL 1% RESISTORS ARE RNG5C.
4. ALL I.C. POWER PINS BYPASSED TO GND BY .47μf CERAMIC CAPACITOR.

ITEM NO.	PART NO.	DESCRIPTION OR SIZE	QTY. REQ.
PARTS LIST			

UNLESS OTHERWISE SPECIFIED	ORIGINATOR	G. VEGA / K. MACOMBER	1-15-80
FRACTIONS / DECIMALS / ANGLES	DRAWN	R. G	1-15-80
± -/+ / ± -/+ / ± -/+	CHECKED	R. Hinch	3-28-80
1. BREAK ALL SHARP EDGES 1/64 MAX.	APPROVED	[illegible]	3-28-80
2. DO NOT SCALE DWG.	USED ON		
3. DIMENSIONING IN ACCORD WITH ANSI Y14.5 STD'S. MAX. ALL MACHINED SURFACES	MATERIAL-		

FERMI NATIONAL ACCELERATOR LABORATORY
UNITED STATES DEPARTMENT OF ENERGY

BOOSTER ACCELERATOR
LOW LEVEL RF
PHASE CONTROLLER

SCALE	FILMED	DRAWING NUMBER	REV.
-/+	F 3/80	0331.00-ED-63397	A

FA Allen