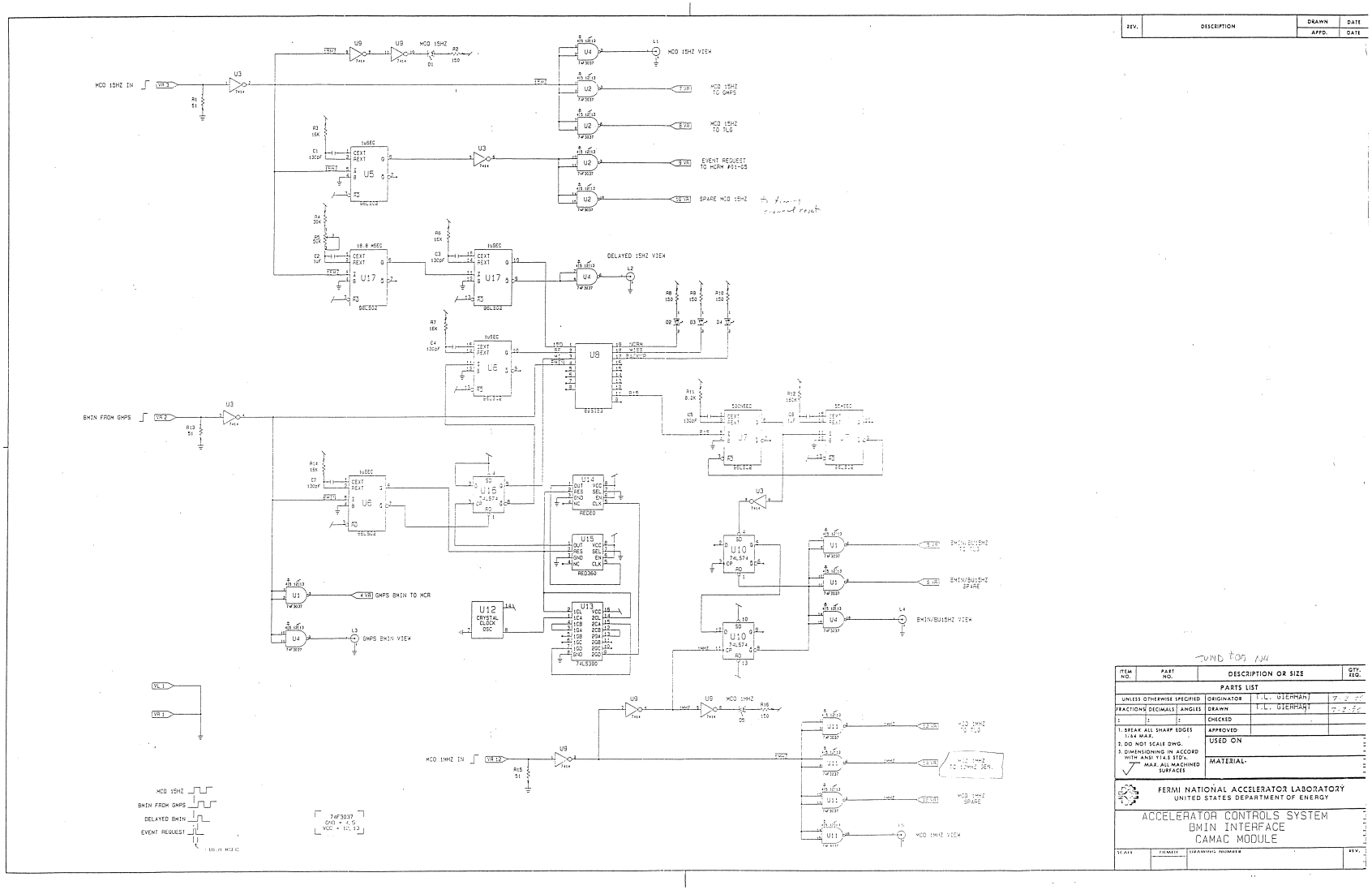

REV.	DESCRIPTION	DRAWN	DATE
		APPD.	DATE

ITEM NO.	PART NO.	DESCRIPTION OR SIZE	QTY. REQ.
PARTS LIST			

UNLESS OTHERWISE SPECIFIED			ORIGINATOR	T.L. GIERMANT	7-2-87
FRACTIONS	DECIMALS	ANGLES	DRAWN	T.L. GIERMANT	7-2-87
±	±	±	CHECKED		
1. BREAK ALL SHARP EDGES 1/64 MAX.			APPROVED		
2. DO NOT SCALE DWG.			USED ON		
3. DIMENSIONING IN ACCORD WITH ANSI Y14.5 STD.					
MAX. ALL MACHINED SURFACES			MATERIAL-		

FERMI NATIONAL ACCELERATOR LABORATORY
UNITED STATES DEPARTMENT OF ENERGY

ACCELERATOR CONTROLS SYSTEM
BMIN INTERFACE
CAMAC MODULE

SCALE	FORMAT	DRAWING NUMBER	REV.